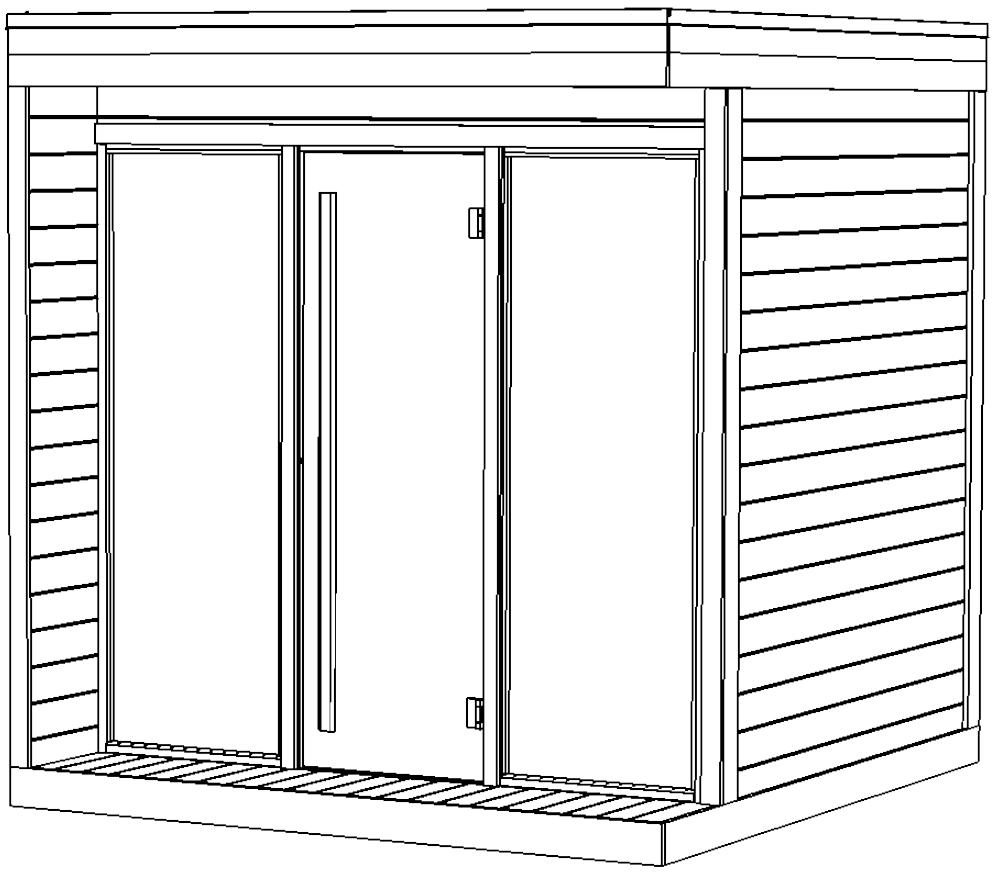

Fl1	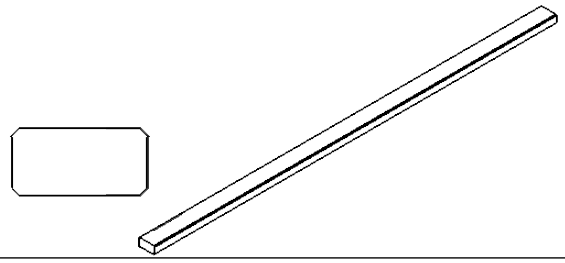	Base frame	44x90x2250	2
Fl2	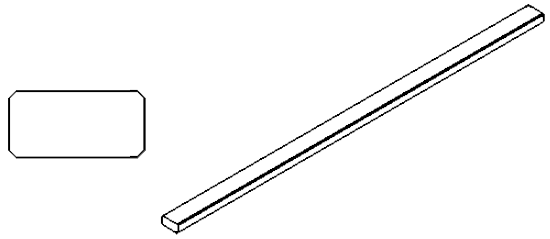	Base frame	44x90x2050	9
W1	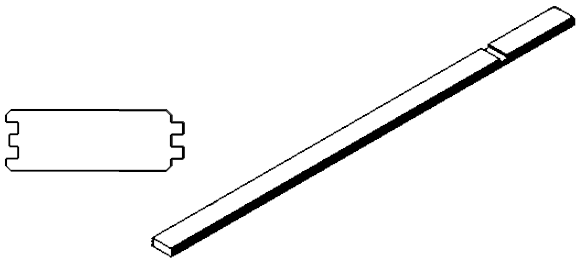	Wall log (side wall1)	40x117x2250	18
W1.1	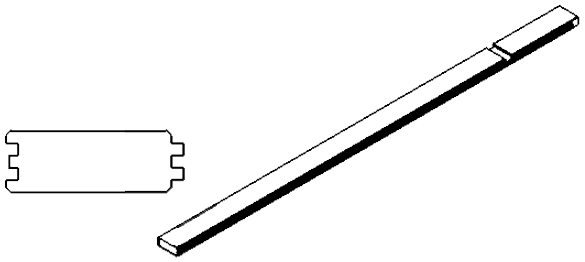	Wall log (side wall1)	40x117x2250	1
W1.2	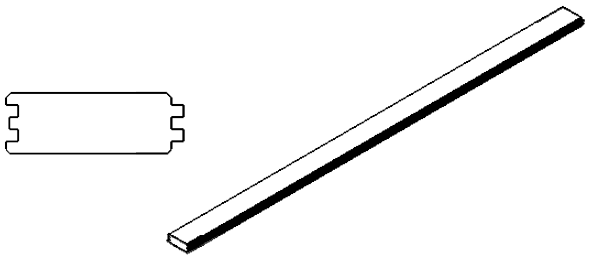	Wall log (side wall1,2)	40x117x2210	2
W1.3	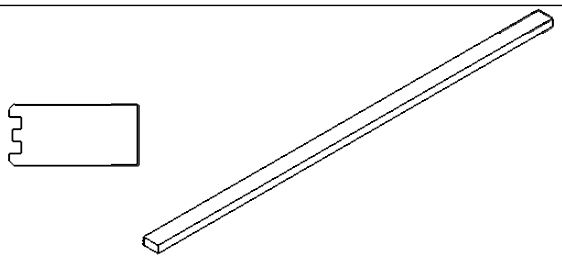	Wall log (side wall 1,2)	40x85x2210	2
W2	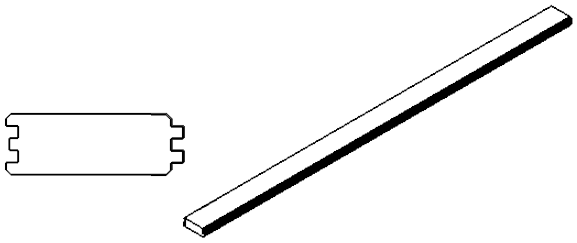	Wall log (back wall)	40x117x2058	19
W2.1	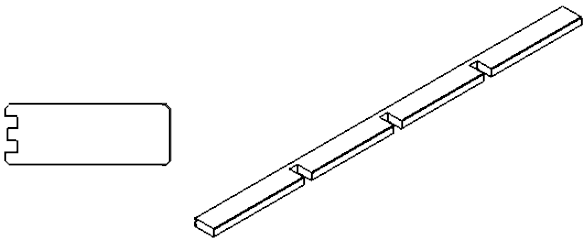	Wall log (back wall)	40x109x2058	1

W3	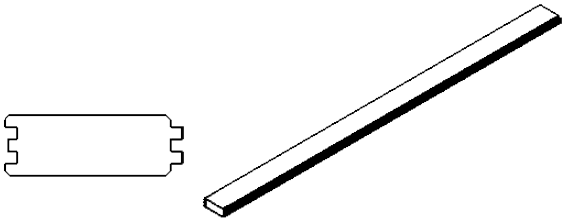	Wall log (side wall2)	40x117x1880	19
W4	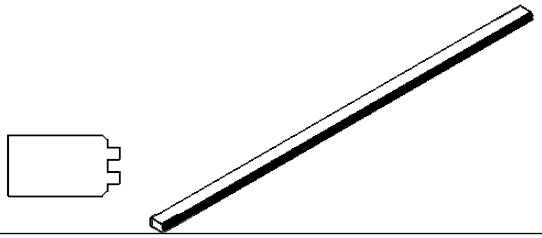	Wall log (front wall)	40x73x2068	1
W4s	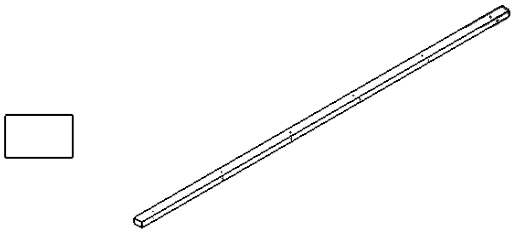	Support detail	28x44x2052	1
W4.1	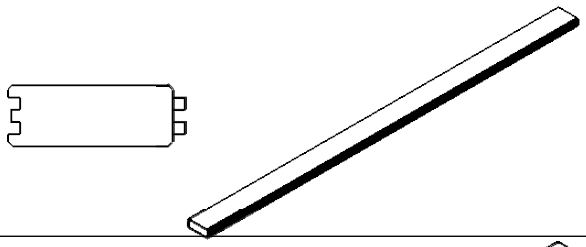	Wall log (front wall)	40x117x2068	1
W4.2	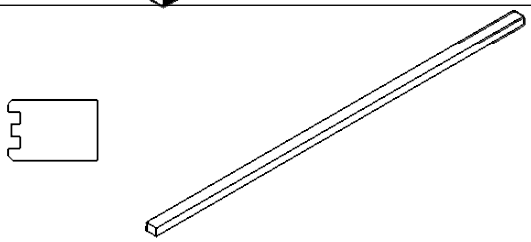	Wall log (front wall)	40x59x2058	1
WE	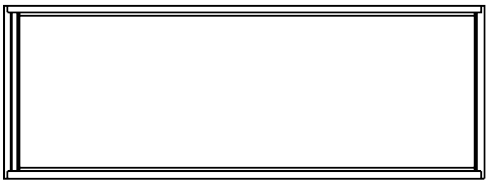	Window element	686x1905	2
DE		Door element	686x1905	1
Wex	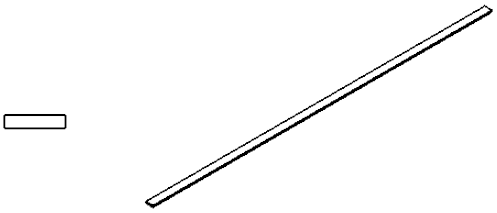	Wind slat for Window Element (plywood)	9x40x1900	1
Cp	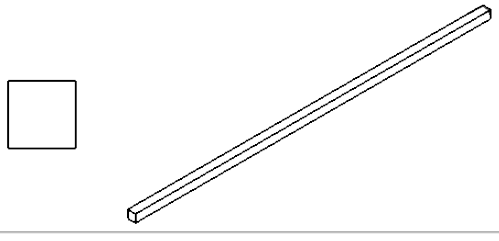	Corner post	44x44x1990	2

Sp	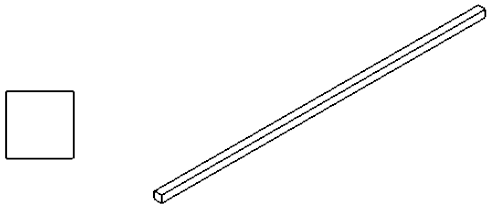	Support	44x44x1796	4
R1	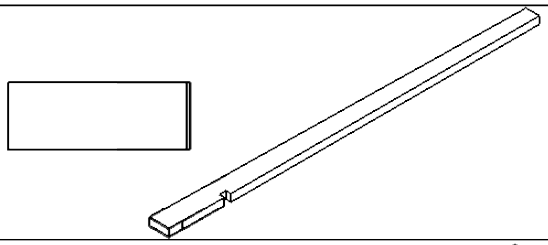	Rafter	44x120x2210	3
R2	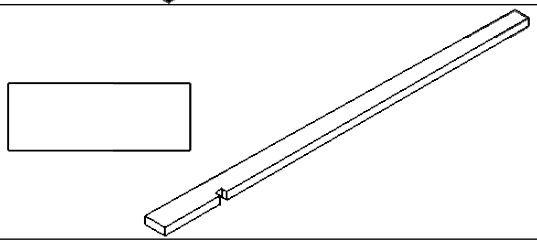	Rafter	44x120x2170	2
Fb	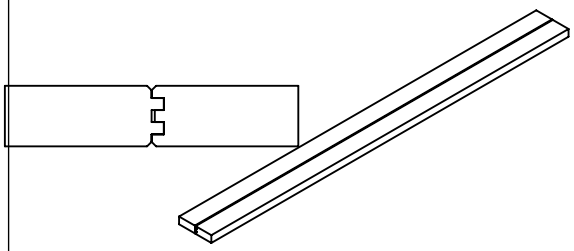	Front beam	40x194x2138	1
Cbh		Ceiling board support	44x44x450	8
Rb	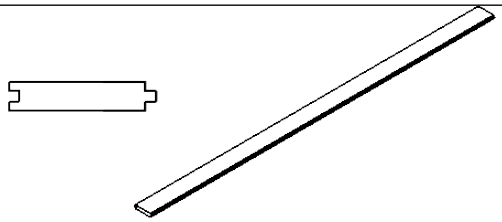	Roof board	19x97x2052	25
Cdb	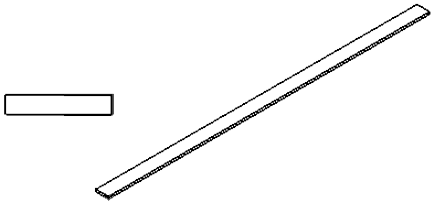	Ceiling distance board	13x70x1794	5
Cb1	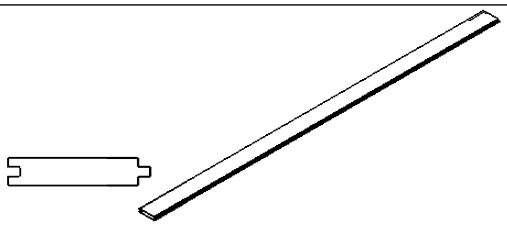	Ceiling board	18x94x2052	21
Cb2	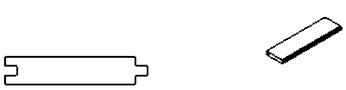	Ceiling board	18x94x326	24

Flb1	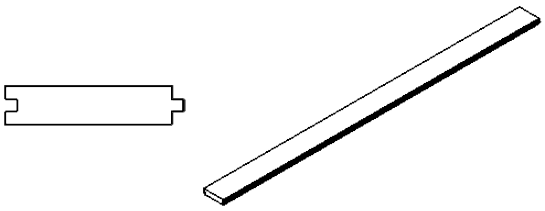	Floor board	26x117x1766	17
Flb2	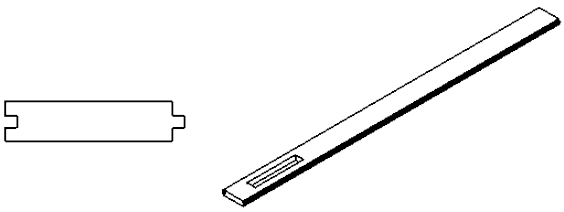	Floor board (vent hole)	26x117x1766	1
Flb3	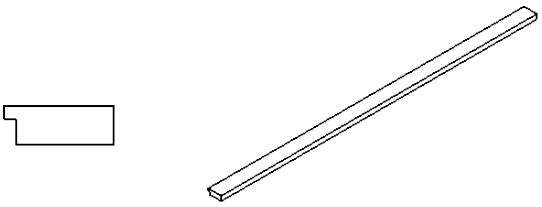	Floor board (cutted)	26x72x1766	1
Bs1	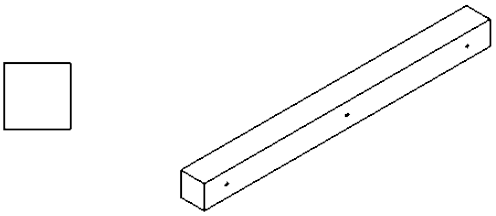	Bench support	44x44x532	2
Bs2	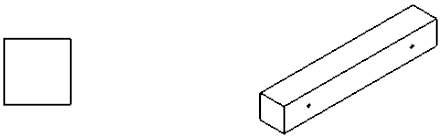	Bench support	44x44x284	3
Bs3	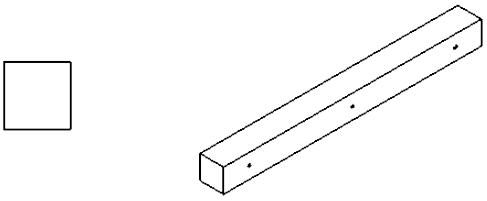	Bench support	44x44x480	2
Bs4		Bench support	44x44x186	2
B1	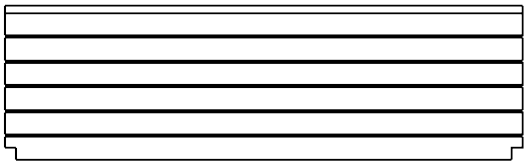	Bench 1	608x2048	1

B2	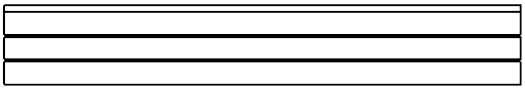	Bench 2	314x2048	1
B3	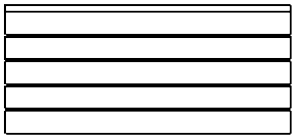	Bench 3	510x1128	1
B4	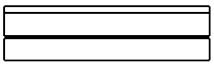	Bench 4	226x812	1
BSE	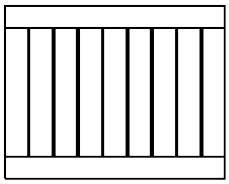	Bench Support Element	686x870	1
BR	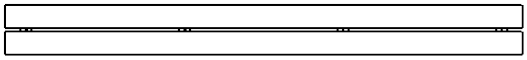	Backrest	190x2048	1
Tr1	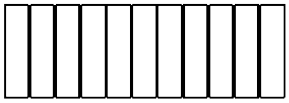	Terrace element	368x1104	1
Tr2	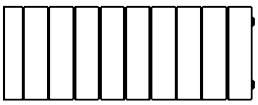	Terrace element	368x984	1
Cs1	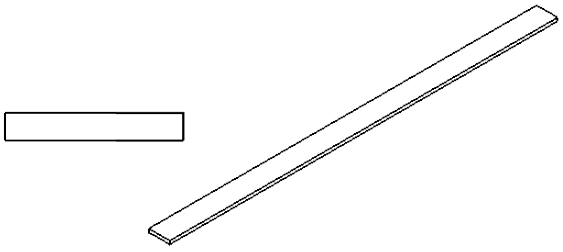	Cover slat	18x118x2174	2

Cs2	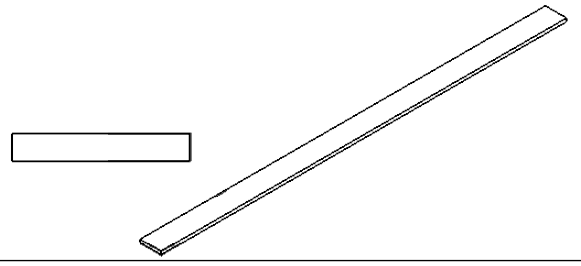	Cover slat	18x118x2269	4
Cs3	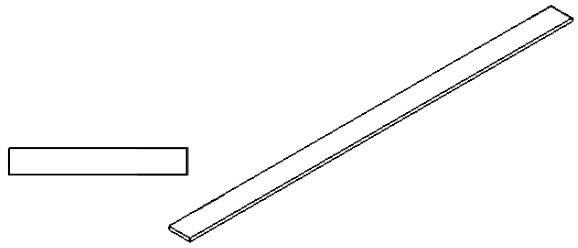	Cover slat	18x118x2138	1
Cs4	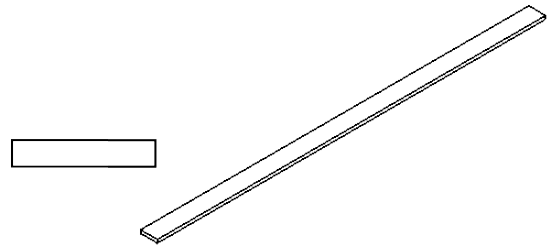	Cover slat	18x94x2174	1
Cs5	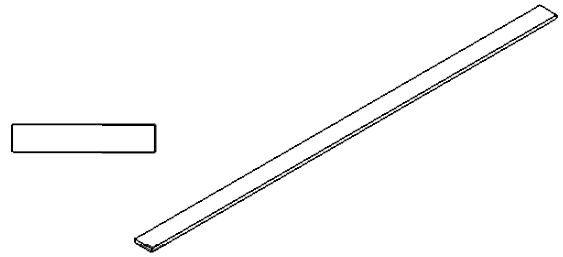	Cover slat	18x94x2269	2
Cs6	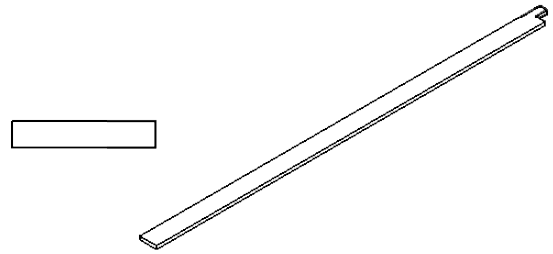	Cover slat	18x94x2260	2
Cs7	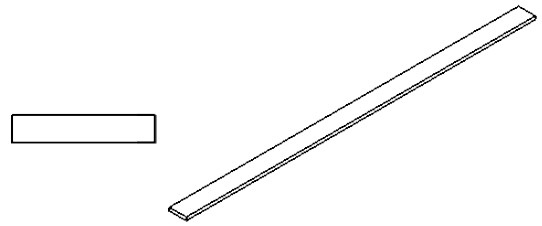	Cover slat	18x94x1950	1
Cs8	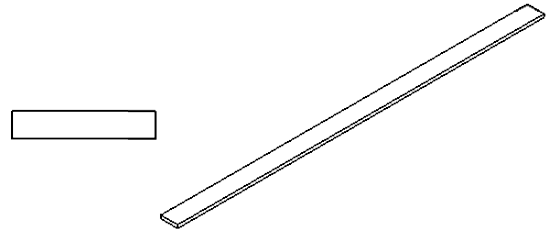	Cover slat	18x94x2070	5
Cs9	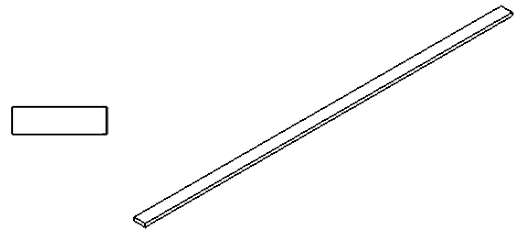	Cover slat	18x62x2070	2

Cs10	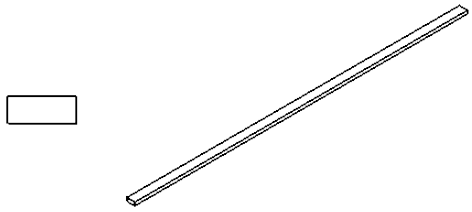	Cover slat	18x45x1862	2
Cs11	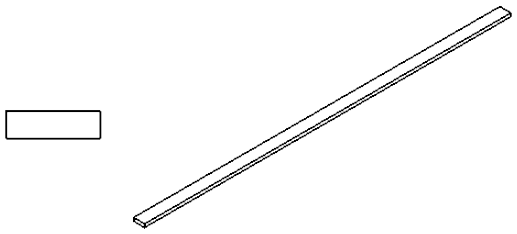	Cover slat	18x62x2052	1
Cs12	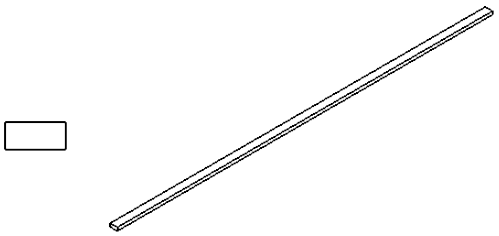	Cover slat	18x40x2098	1
Cs13	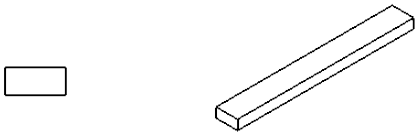	Cover slat	18x40x328	1
Hc1	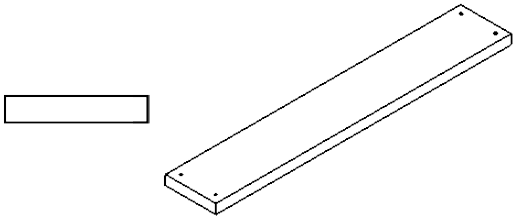	Heater cover board (side)	18x94x550	4
Hc2	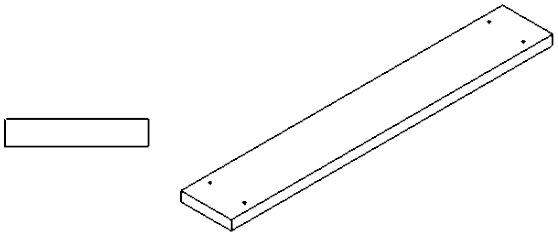	Heater cover board (front)	18x94x600	2
Hc3		Heater cover frame	28x44x200	4
	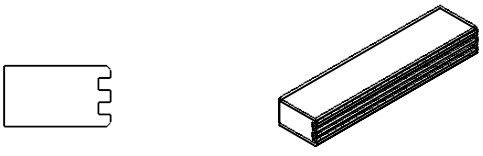	Hitting block	300mm	2

	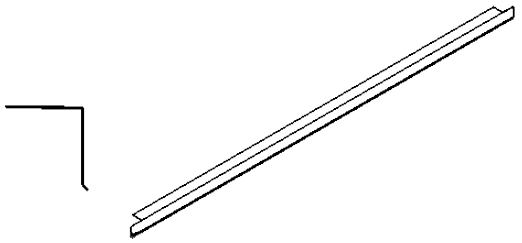	Metal roofing sheet (back wall)	2150mm	1
	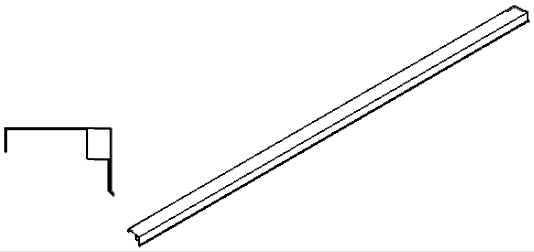	Metal roofing sheet (front wall)	2200mm	1
	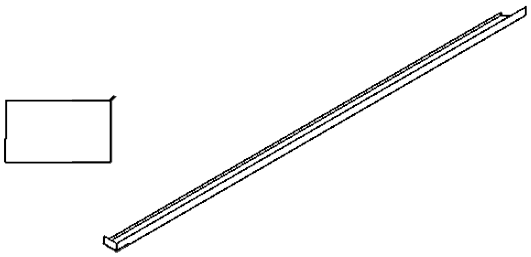	Metal roofing sheet (side wall)	2300mm	1
	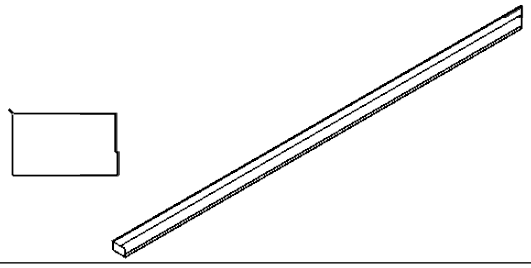	Metal roofing sheet (side wall)	2300mm	1
	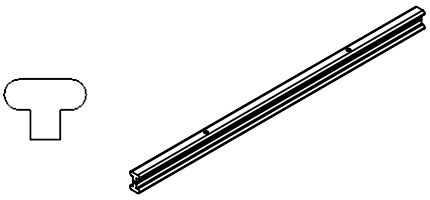	Door handle		1+1
	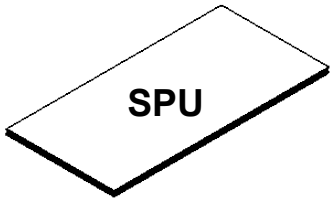	SPU insulation panel	600x1200	6
		Rubber roof cover	1mx10m	1
	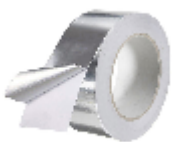	Foil tape		1

		Silicon gun		1
		Bitumen sealant		1
	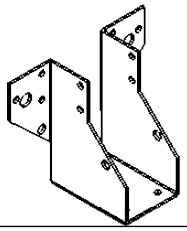	Joist hanger		3
	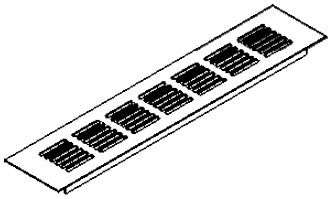	Vent cover floor		1
		Vent cover wooden		1
		Vent cover metal		3
	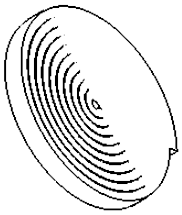	Gasket for first row wall boards		3
		Cap for door and window frame screw holes		22
	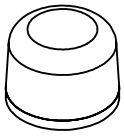	Door stopper		1

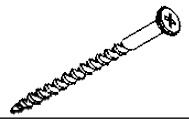	160mm screws	186
	120mm screws	9
	90mm screws	46
	80mm screws	62
	70mm screws	288
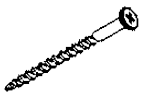	60mm screws	13
	50mm screws	1
	45mm screws	95
	40mm screws (black)	240
	30mm screws	6
	20mm screws	12
	6x50mm screws round head (for door and window)	12
	40mm screws round head (for joist hanger	36
	4,2x25mm screws round head	10
	4,8x25mm roofing screws	30
	40mm nails (ceiling boards, inside,outside)	155
	50mm nails (for roof boards)	250
	55mm bolt (door handle)	2

FRONT SIDE

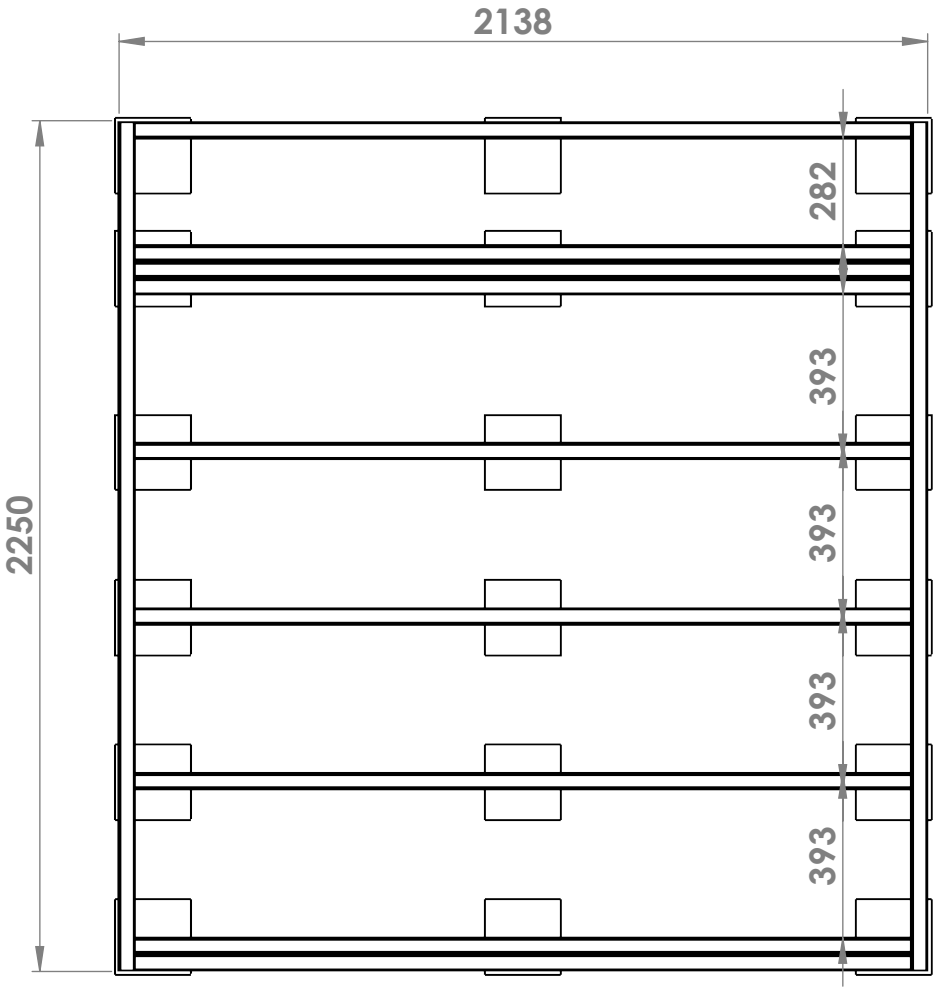

Base frame and recommended support positions

Connect the base frame details accordind to drawings next to below. Make sure that the frame is level and that the diagonals are equal (X=Y).
Connect the base frame using
5x90mm screws and
5x80mm screws.

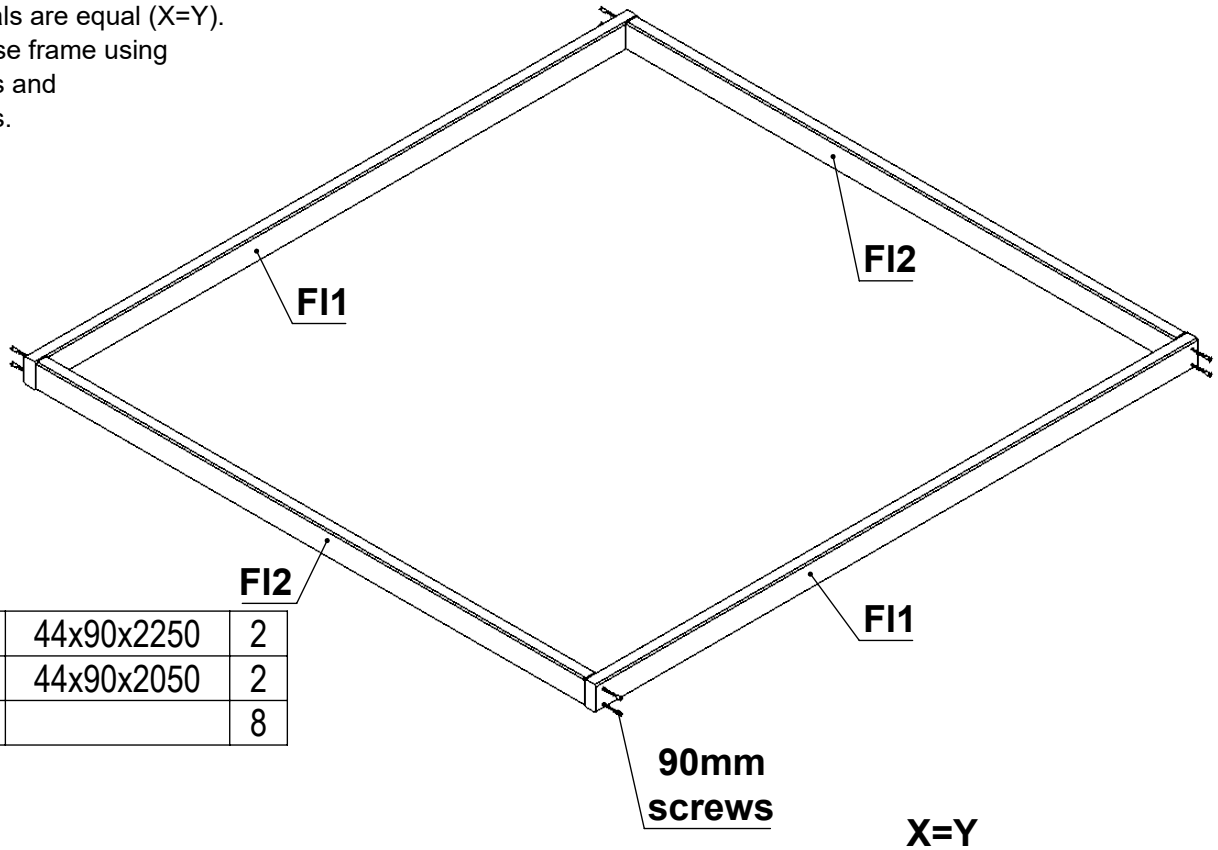

Fl1	44x90x2250	2
Fl2	44x90x2050	2
90mm screws		8

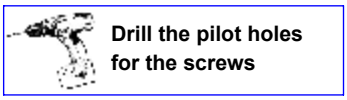

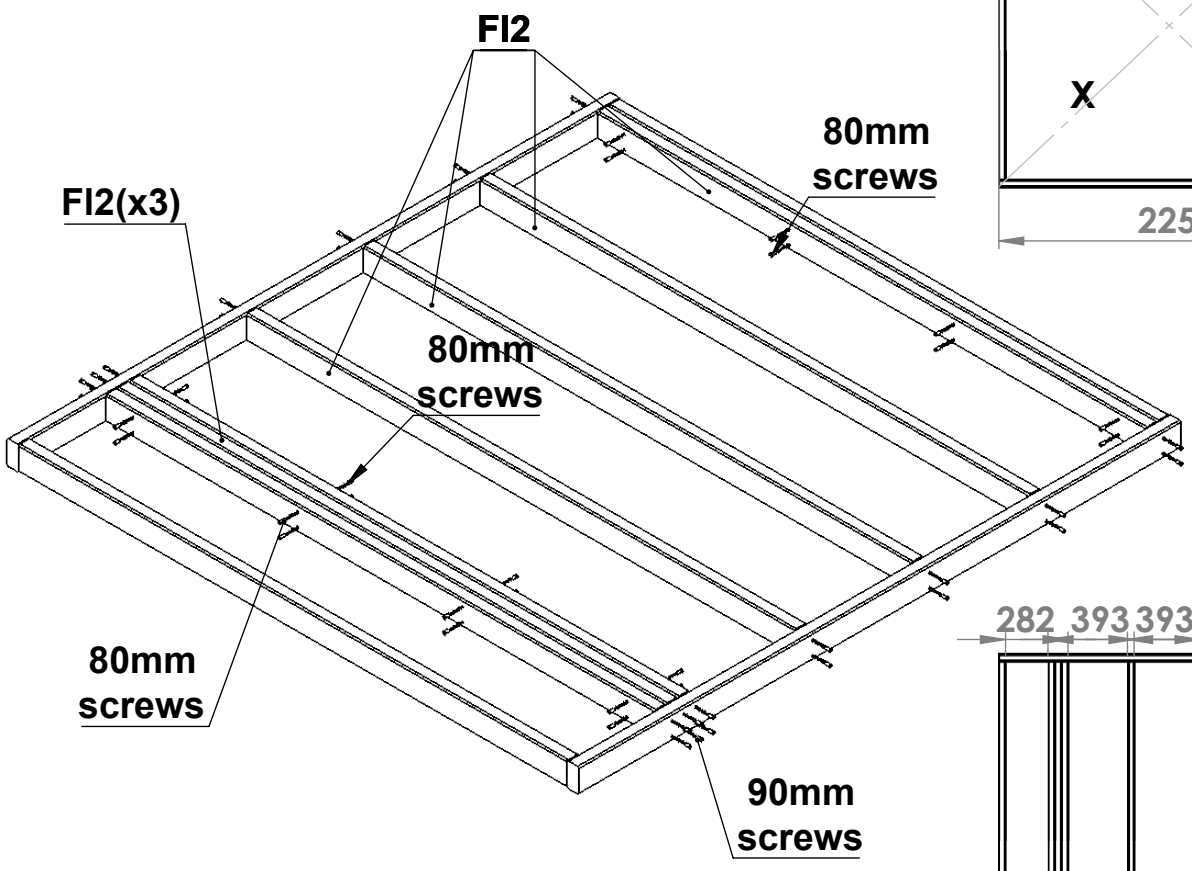

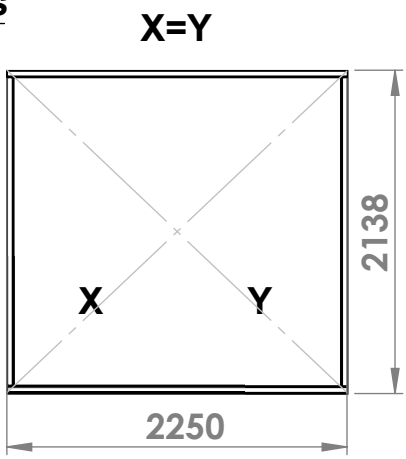

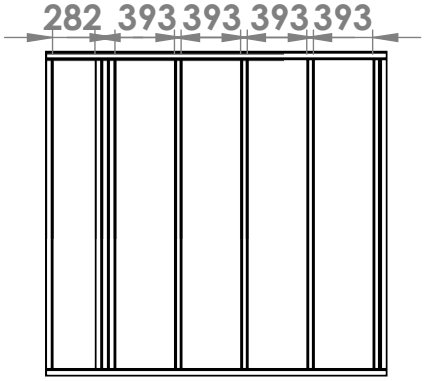

Fl2	44x90x2050	7
80mm screws		24
90mm screws		28

ATTENTION!

Remove the sticker from gasket.

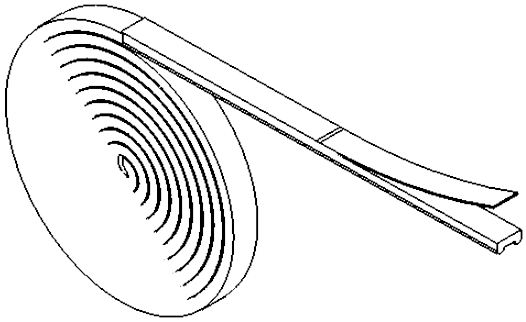

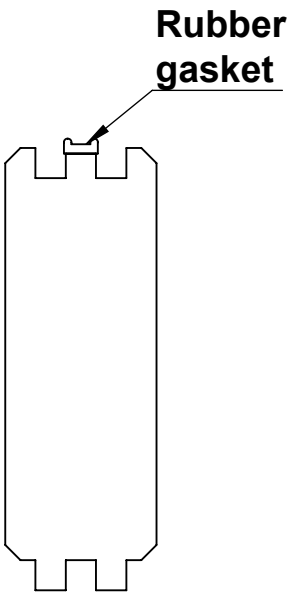

For First Row Wall Boards W1, W2, W3
add rubber gasket to the joint as shown.

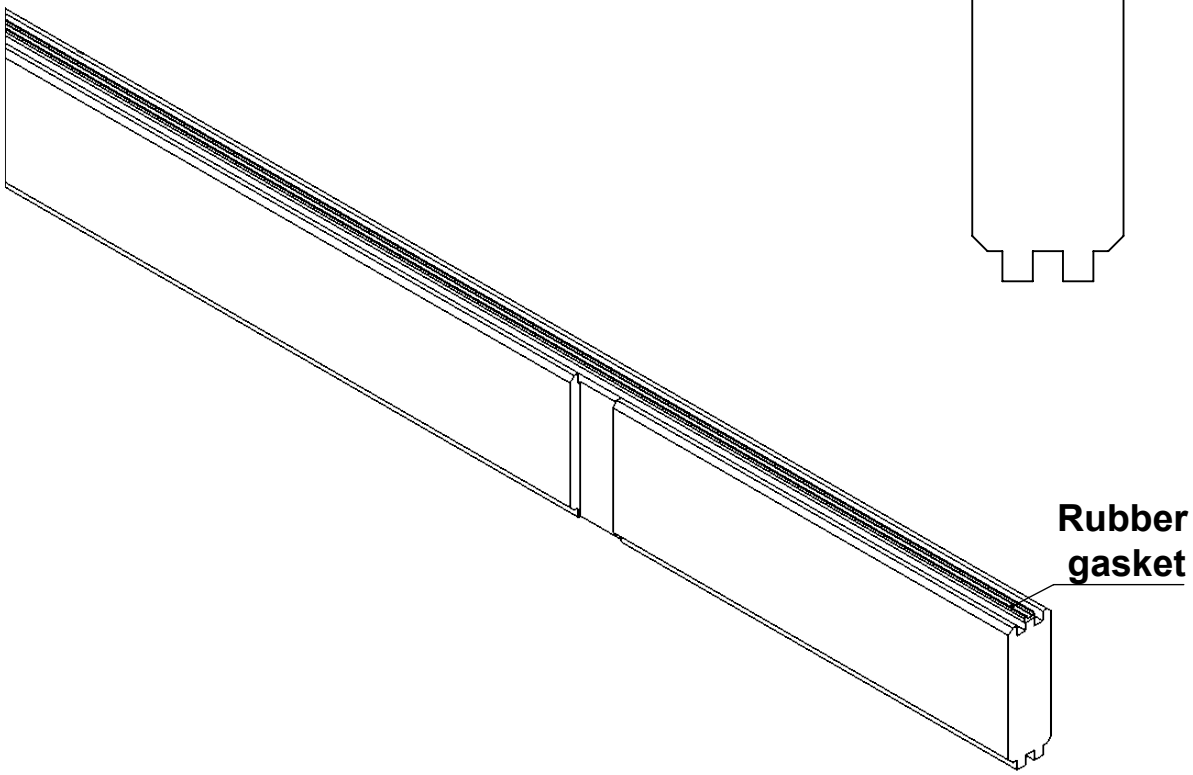

Place the first row of wall logs on the base frame. Make sure the wall logs are in the same line with base frame from outside. Use 6x160mm screws to fix the wall logs to the base frame.
Pre-drill the holes for the screws to prevent wall logs from splitting. Use 6mm drill bit. In the corners use 4mm drill bit.

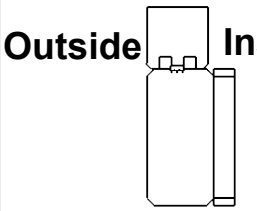

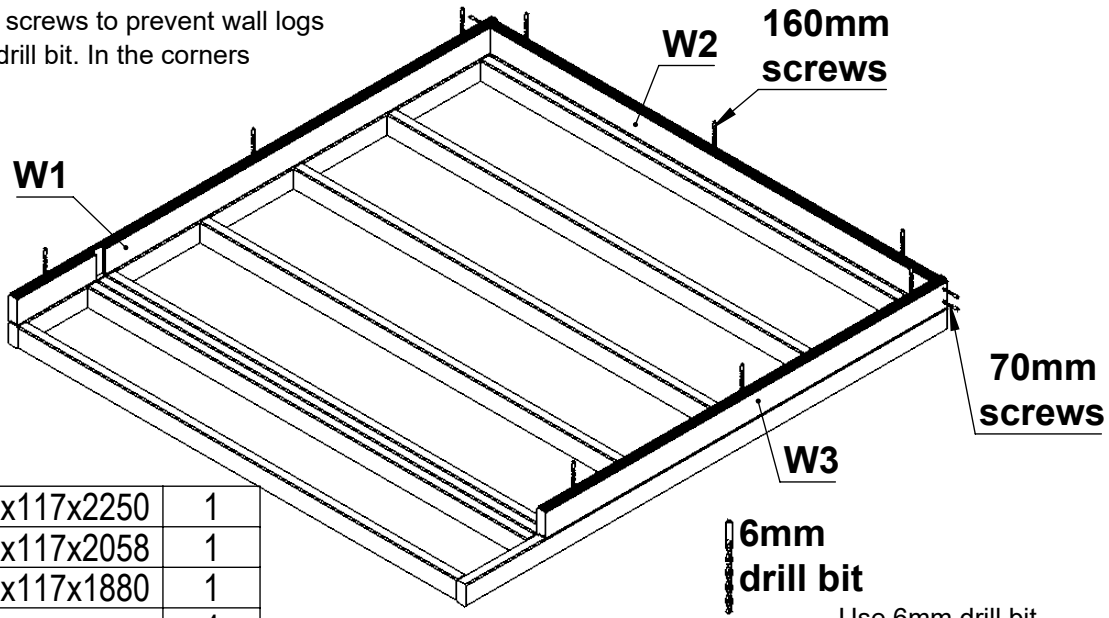

W1	40x117x2250	1
W2	40x117x2058	1
W3	40x117x1880	1
70mm screws		4
160mm screws		9

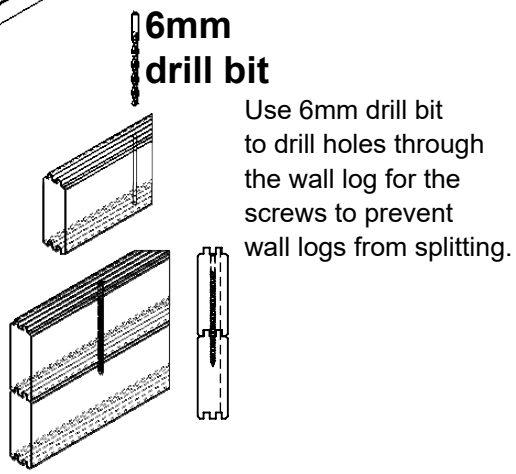

Use 6mm drill bit to drill holes through the wall log for the screws to prevent wall logs from splitting.



Place the second row of wall logs on top of the first row. Use a hitting block and a rubber mallet to set the logs in place. Attach the second row to the first using 6x160 screws. Pre-drill the holes for the screws to prevent wall logs from splitting.
Install corner posts in the inner corners. Leave 45mm gap at the bottom, between corner posts and base frame.
Use 70mm screws to fix corner posts between the wall logs. Pre-drill holes for the screws.

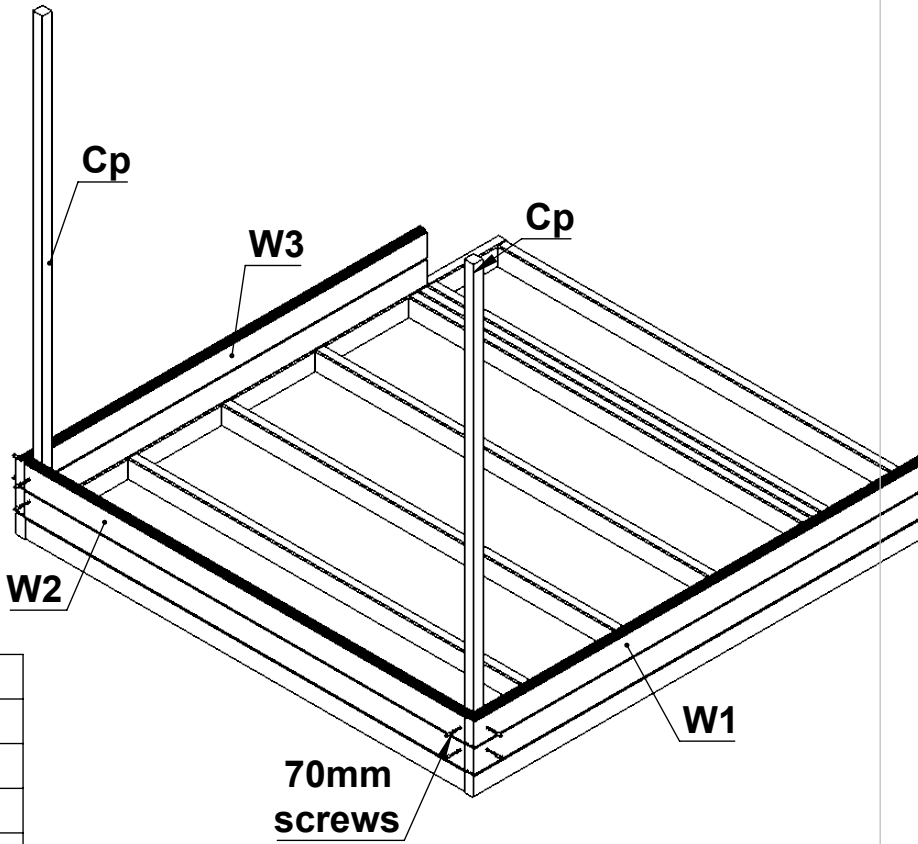

W1	40x117x2250	1
W2	40x117x2058	1
W3	40x117x1880	1
Cp	44x44x1990	2
70mm screws		12
160mm screws		9

Level the corner posts by using temporary supports as shown below. Make sure the distance between the posts from top is 1712mm. Use 70mm screws.

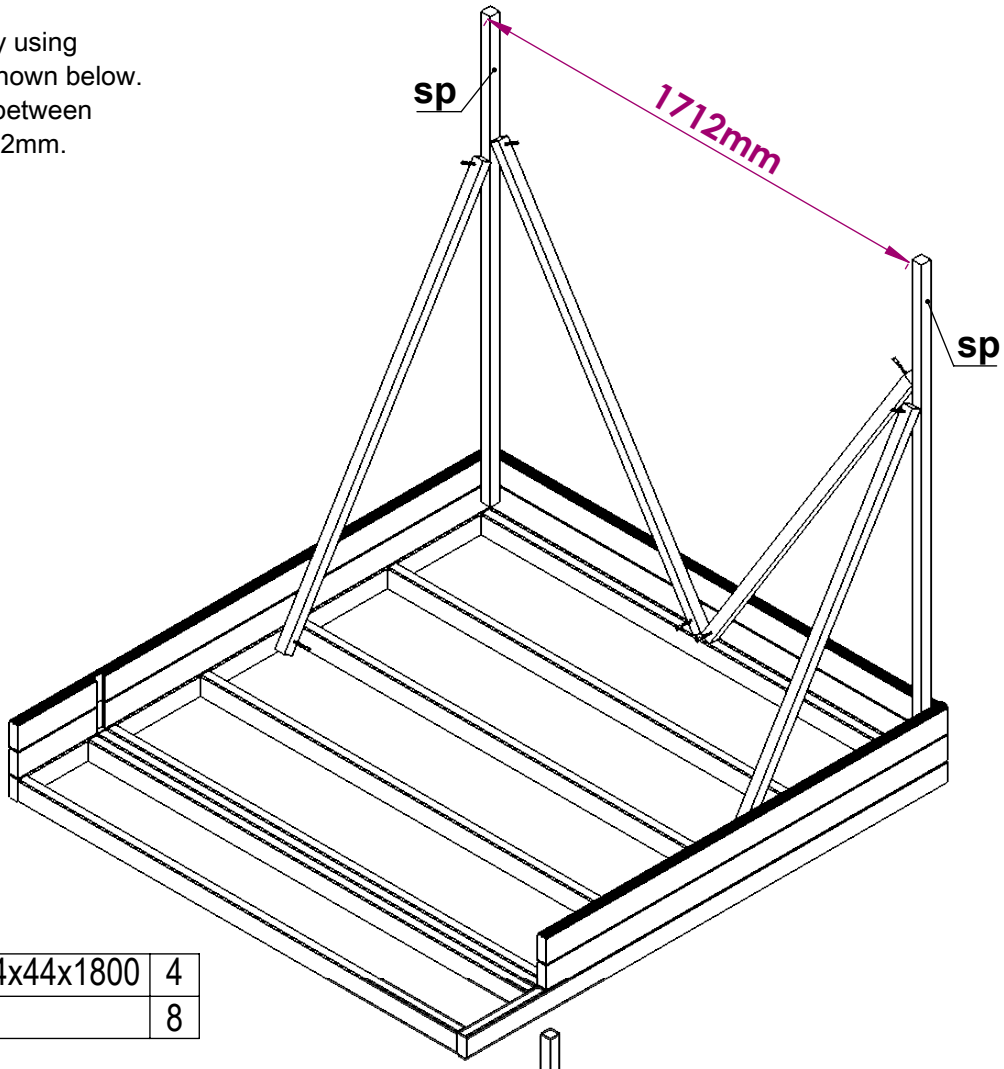

sp	44x44x1800	4
70mm screws		8

Drill the pilot holes for the screws

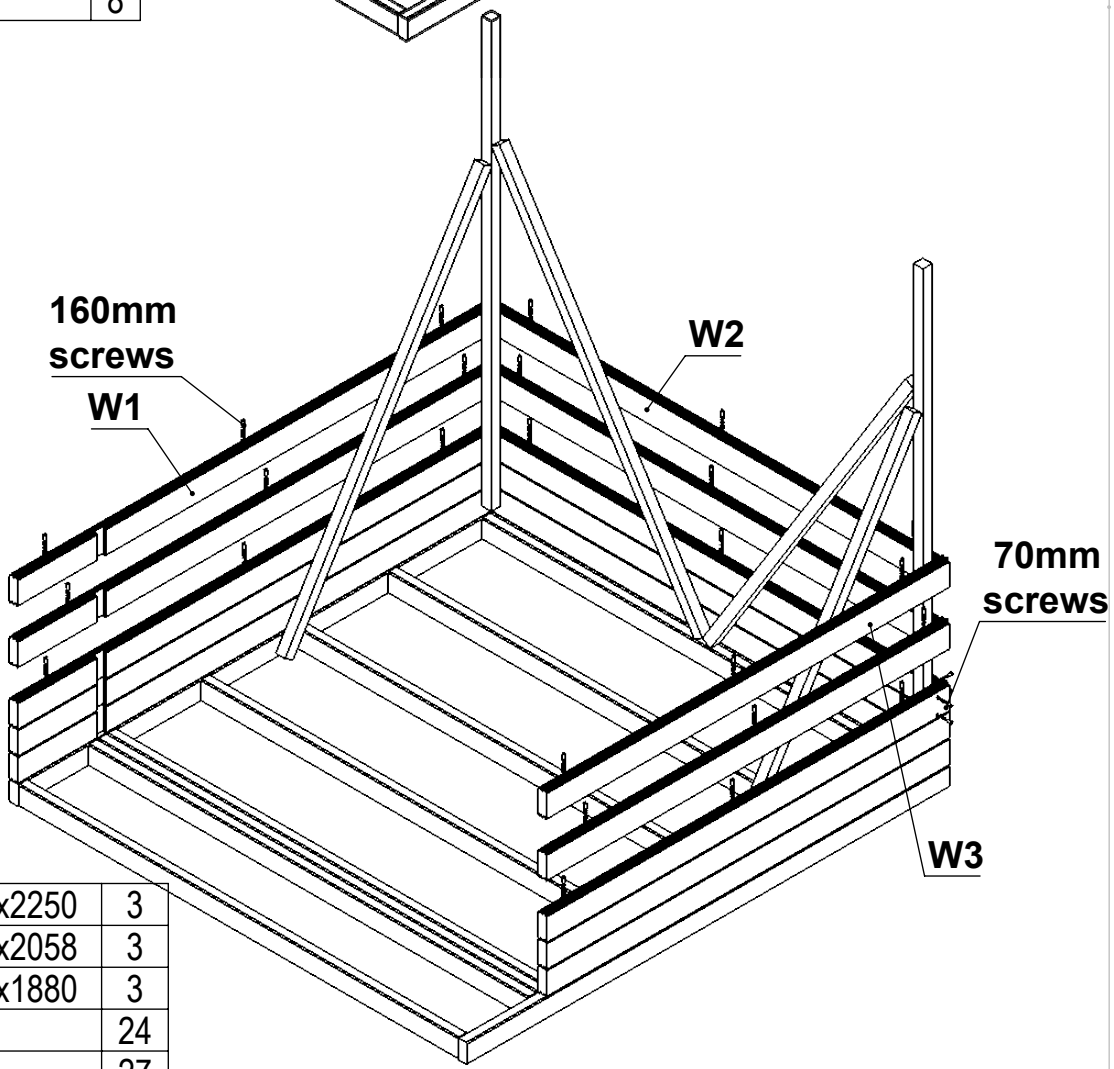

W1	40x117x2250	3
W2	40x117x2058	3
W3	40x117x1880	3
70mm screws		24
160mm screws		27

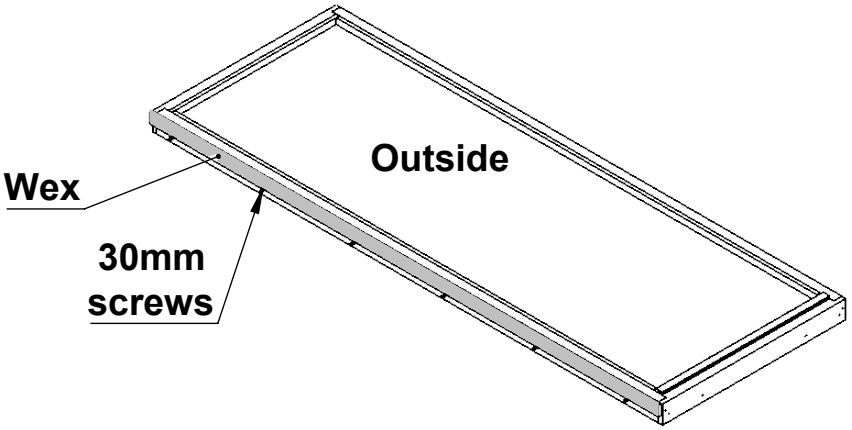

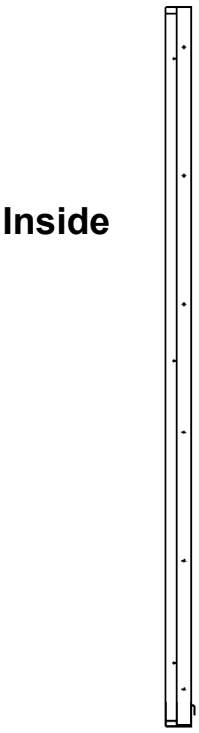

Wex	9x40x1900	1
Window element	686x1905	1
30mm screws		6

When the five rows wall logs are fixed, install the window elements and the door element.
Window elements distance from outside is 370mm.
Window element,s Wex must sit in the milled groove W1.
Use 70mm screws.

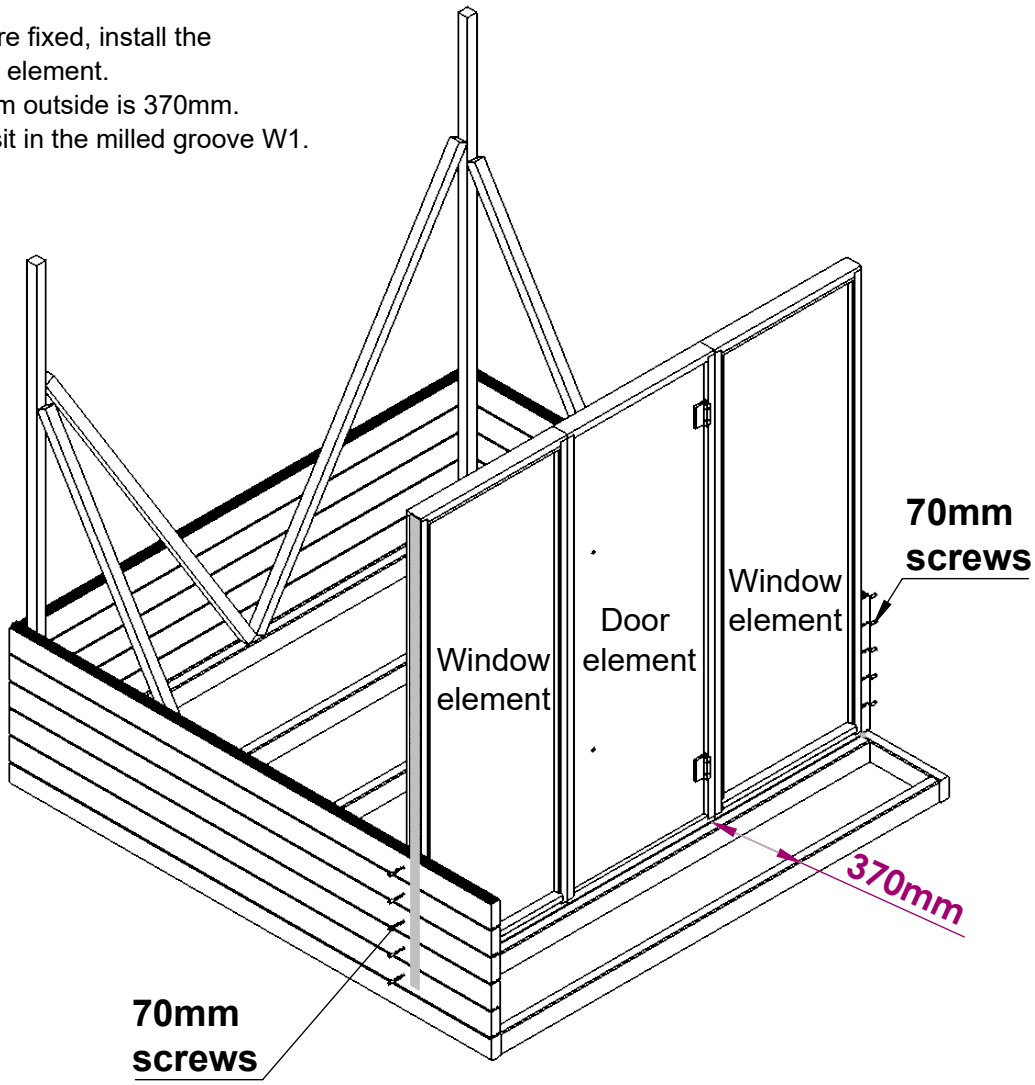

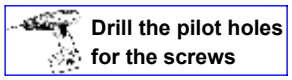

Window element	686x1905	2
Door element	686x1905	1
50mm screws	round head	12
70mm screws		10
80mm screws		4

Connect the Window and Door element,s from inside using 6x50mm round-head screws. From the bottom use 80mm screws, to connect element,s to the base frame.The holes are already pre-drilled.

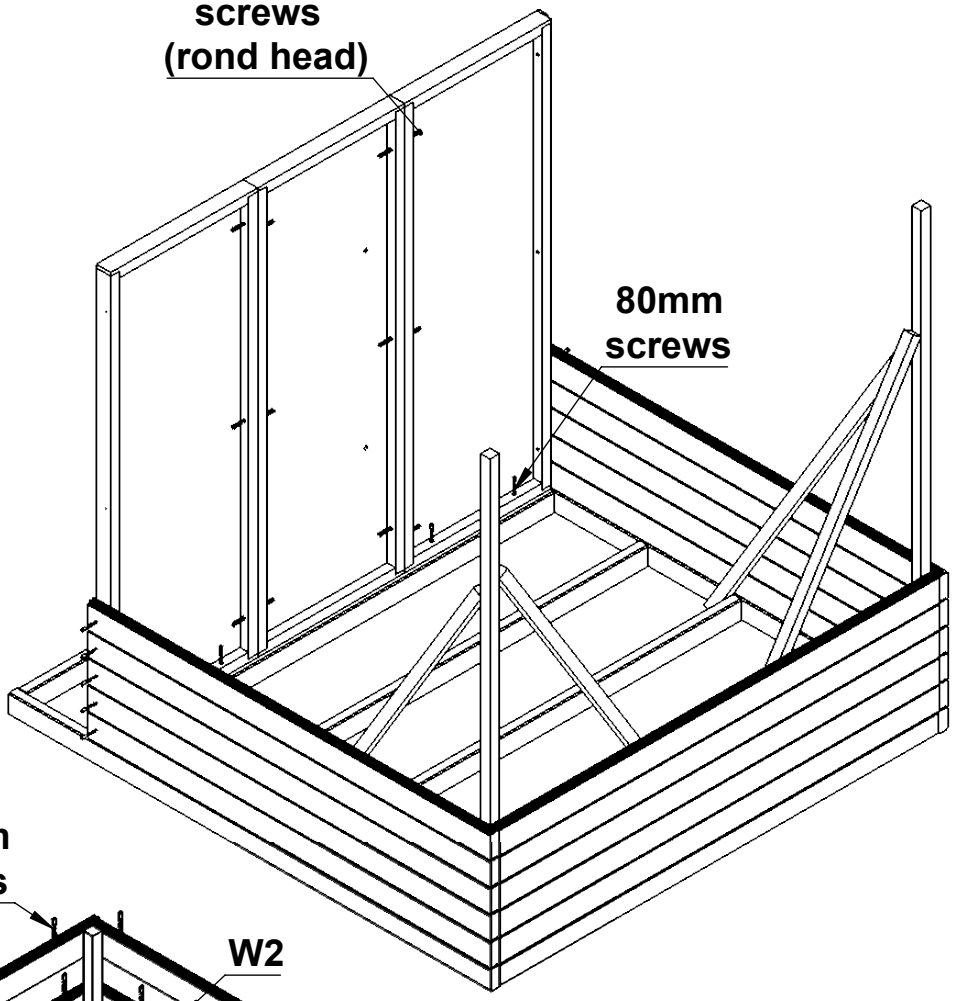

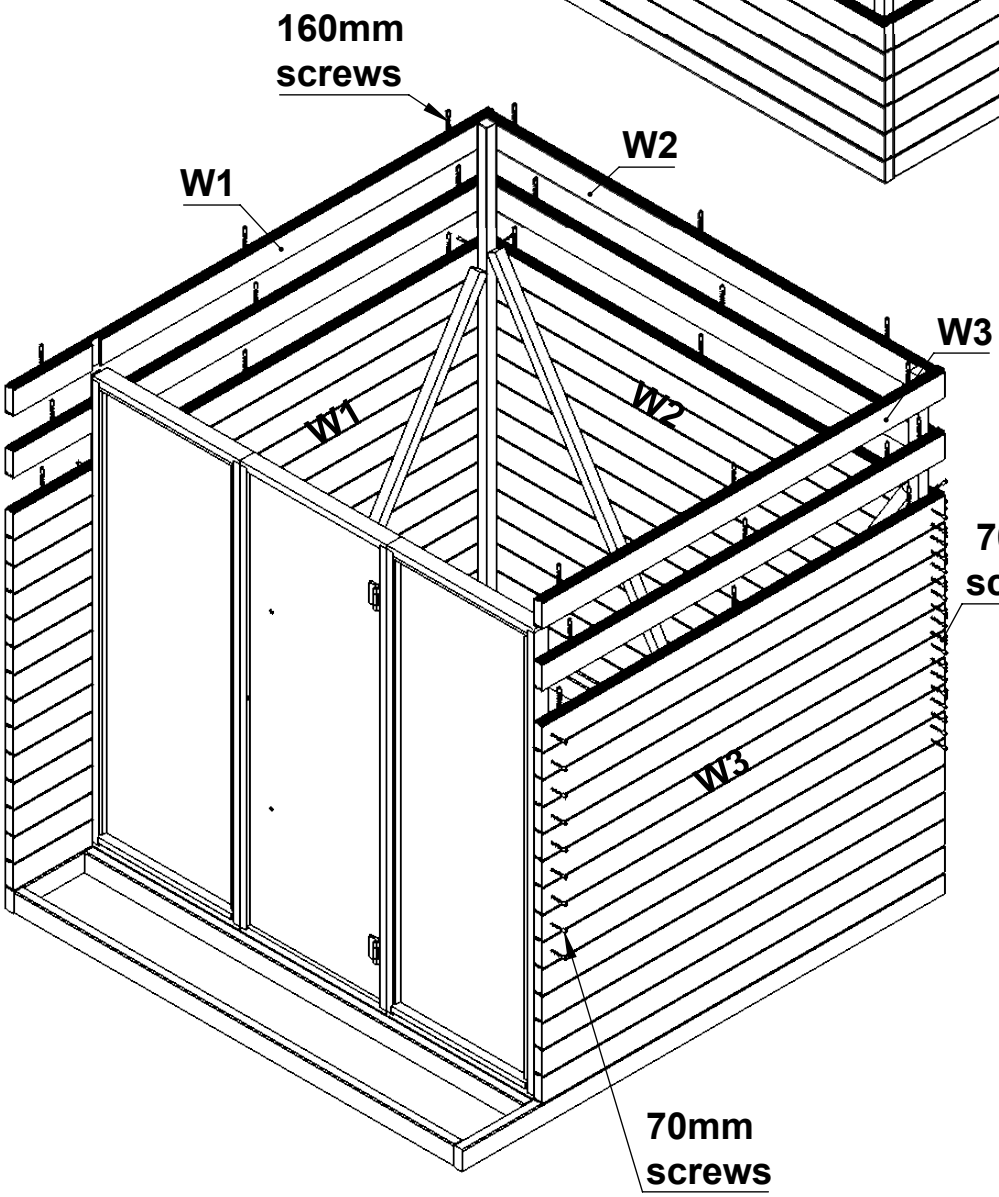

Continue with the install of wall logs till top (13 rows) using 160 mm screws to fix the boards to each other and 70 mm screws to fix all logs to corner posts and the window frames.
Pre-drill holes for the screws to prevent wall logs from splitting.



Drill the pilot holes for the screws

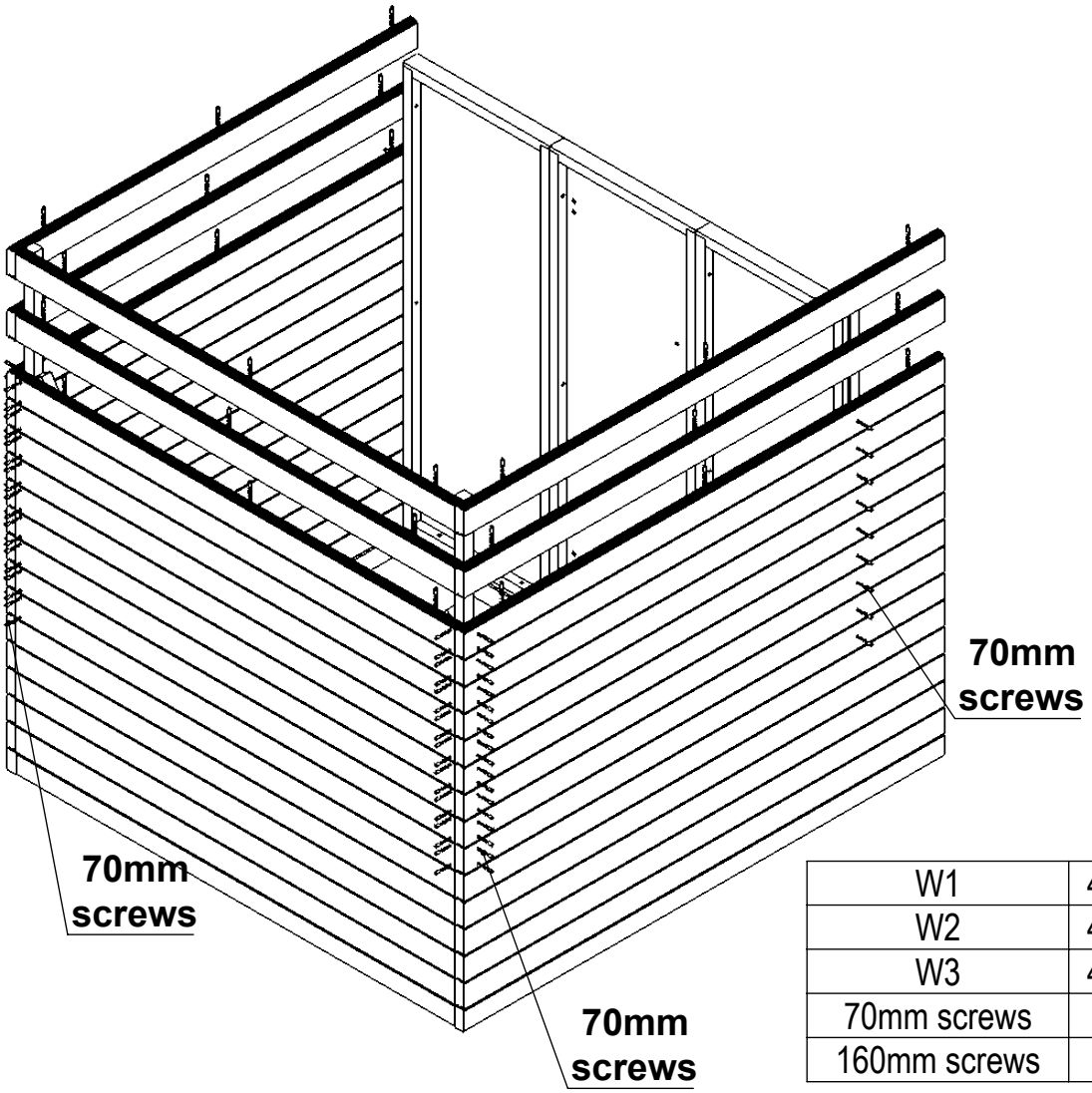

W1	40x117x2250	13
W2	40x117x2058	13
W3	40x117x1880	13
70mm screws		130
160mm screws		117

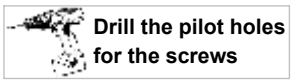

Fix detail W4.
All the logs at the top must be at the same height.
If there is a gap between W4 and windows and door element`s, it`s normal.
Follow next step.

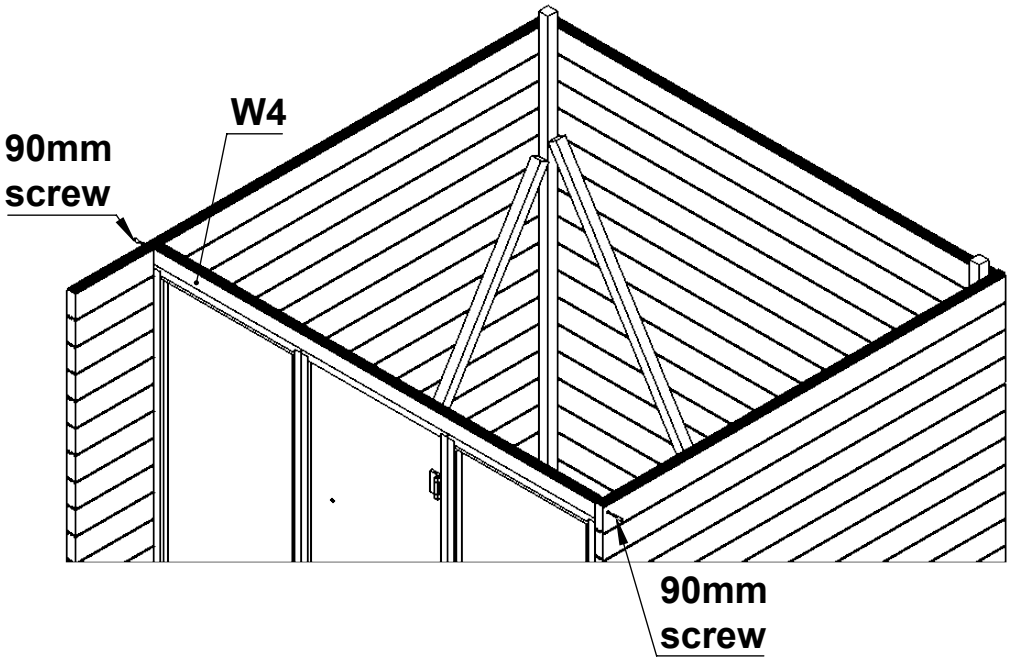

W4	40x73x2068	1
90mm screws		2

Use 70mm screws to fix detail W4s to the window element`s. Then use 60mm screws to connect this detail to the W4.

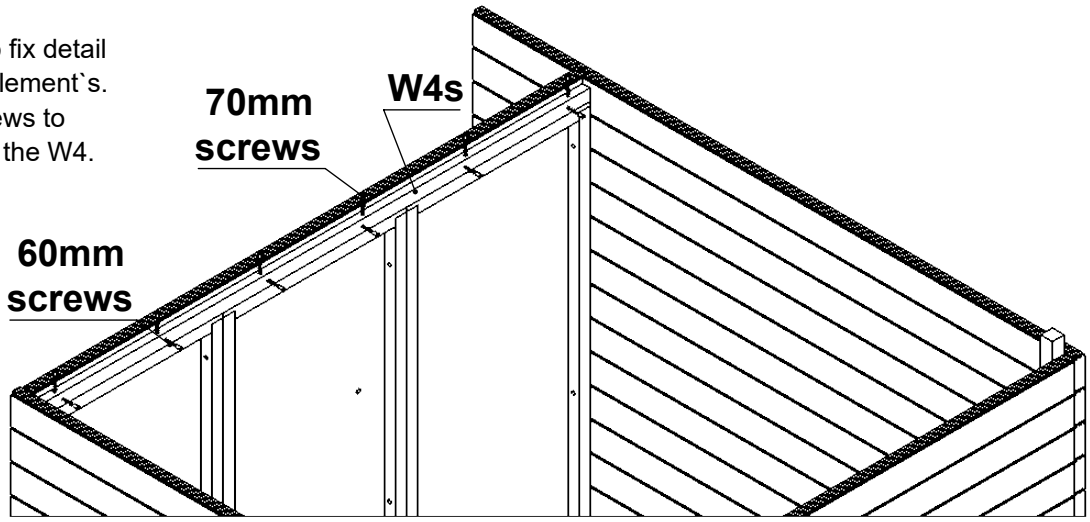

W4s	28x44x2052	1
60mm screws		6
70mm screws		6

Detail W4.1 have a cutted tongue in one side. This side must sit in a milled groove.

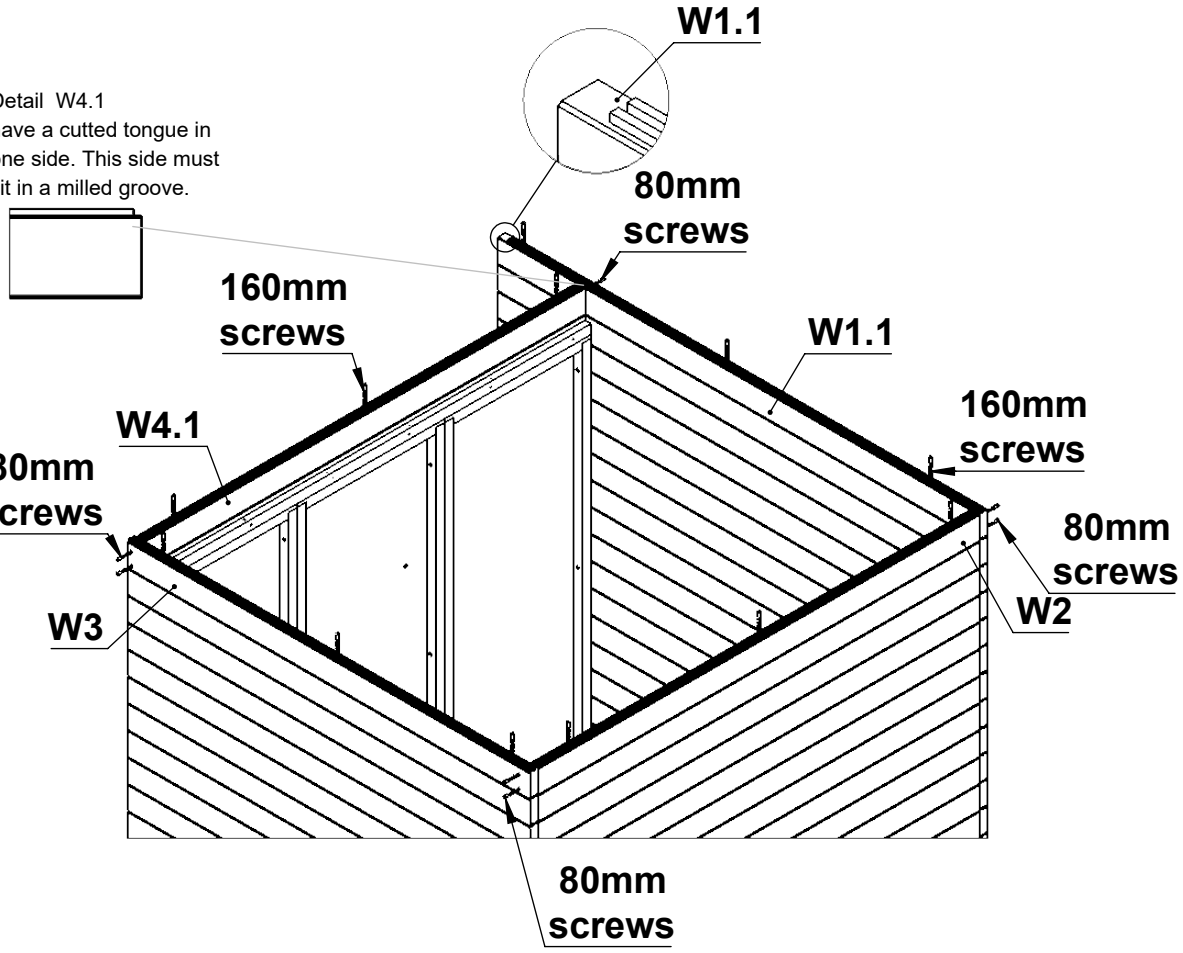

W1.1	40x117x2250	1
W2	40x117x2058	1
W3	40x117x1880	1
W4.1	40x117x2068	1
80mm screws		8
160mm screws		12

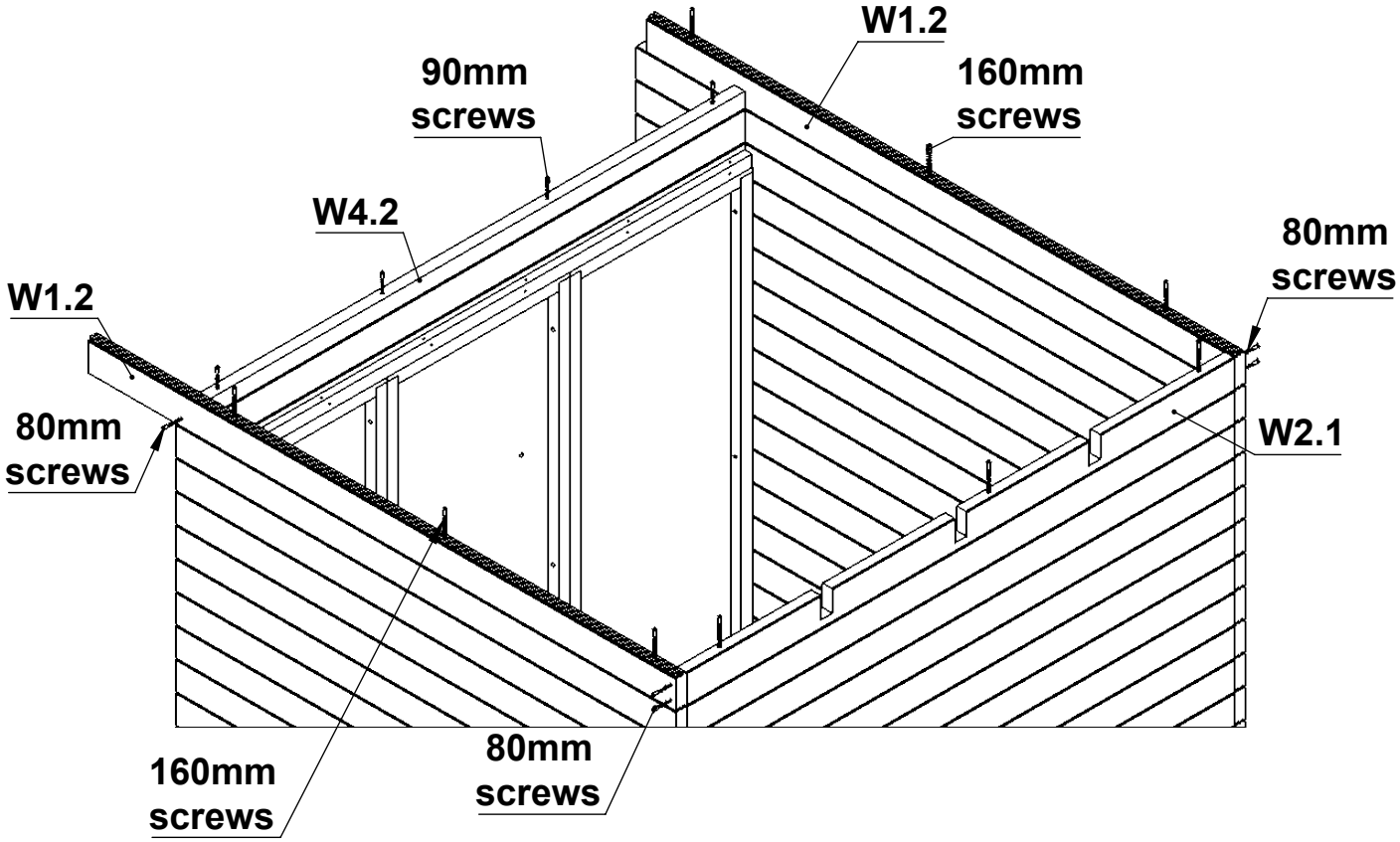

W1.2	40x117x2210	2
W2.1	40x109x2058	1
W4.2	40x59x2058	1
80mm screws		6
90mm screws		4
160mm screws		9


Drill the pilot holes for the screws

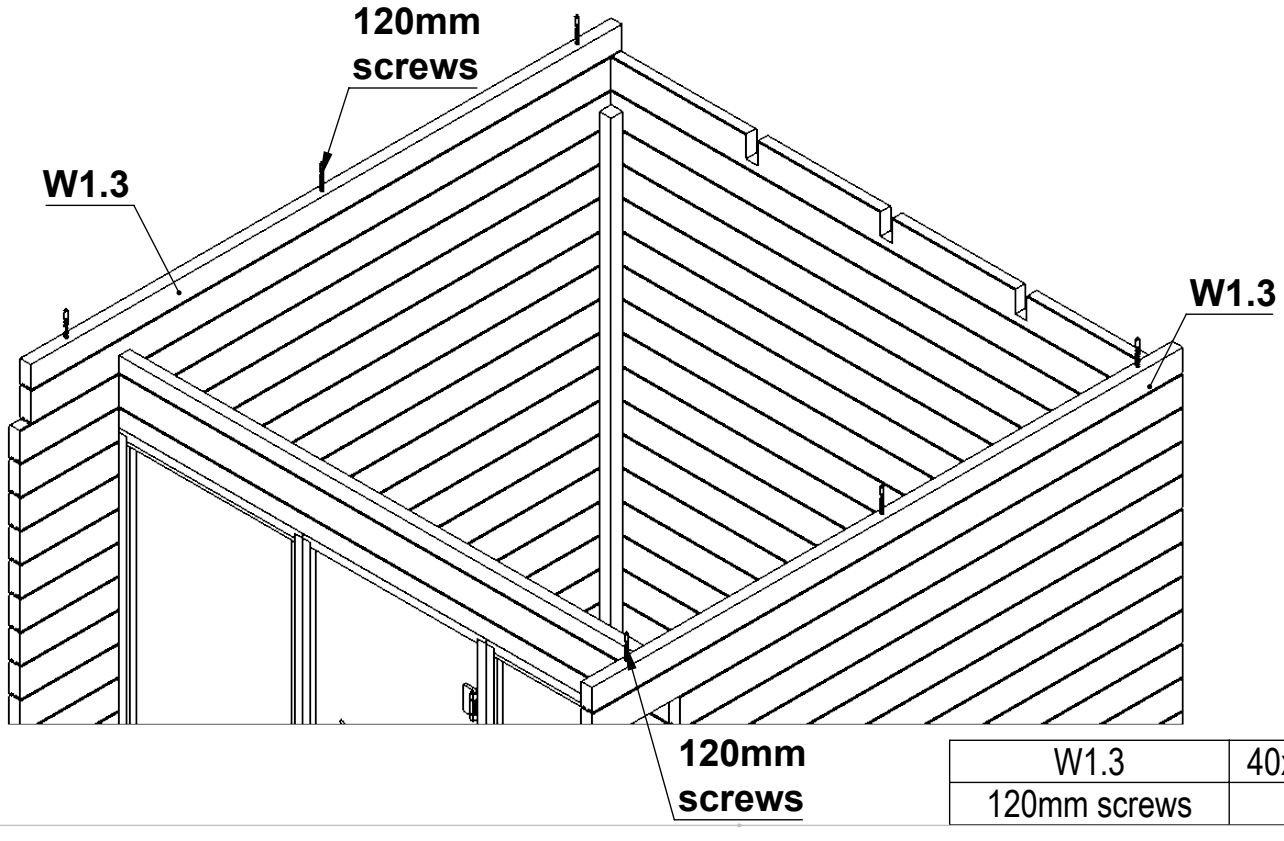

W1.3	40x117x85	2
120mm screws		6

Connect rafters R2 to the wall boards using 80mm screws.

Rafters 1,2 have a milled groove in front side which sit in the front wall. Rafter 1 have milled groove for a joist hanger.

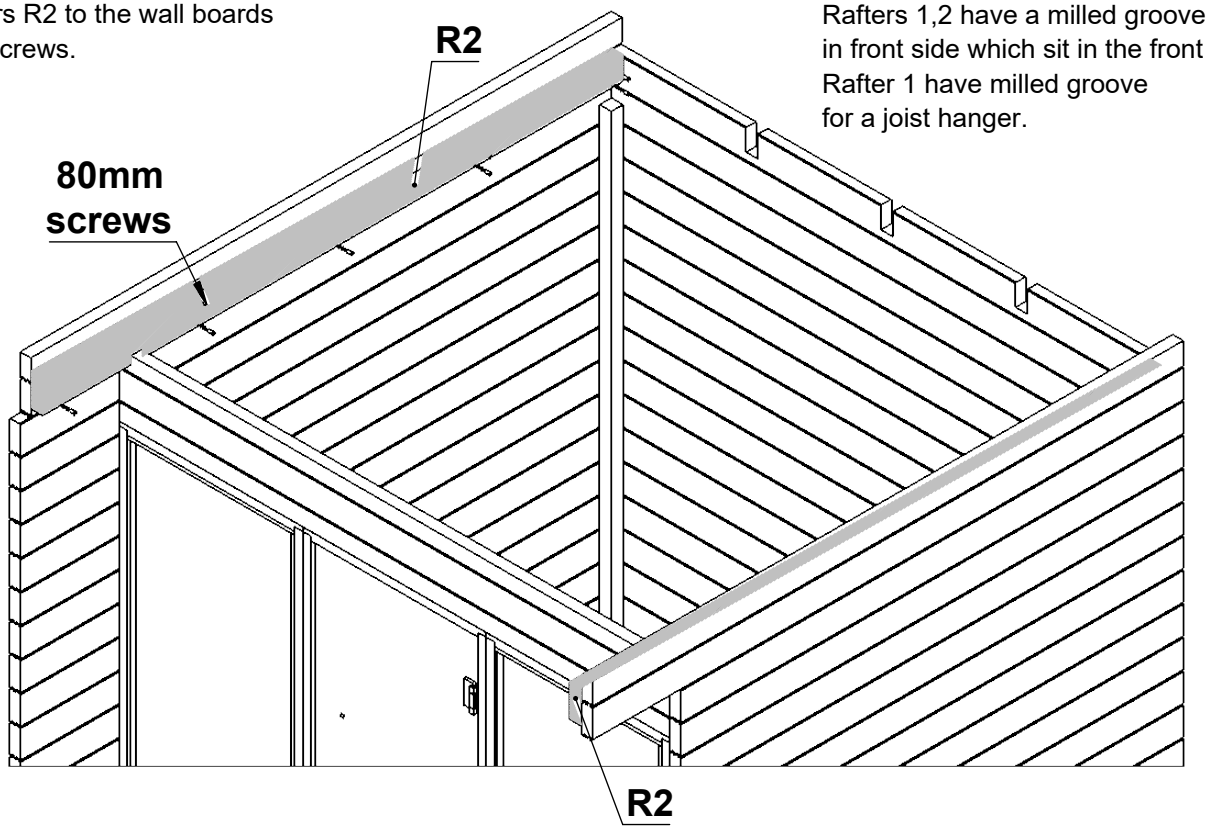


Drill the pilot holes for the screws

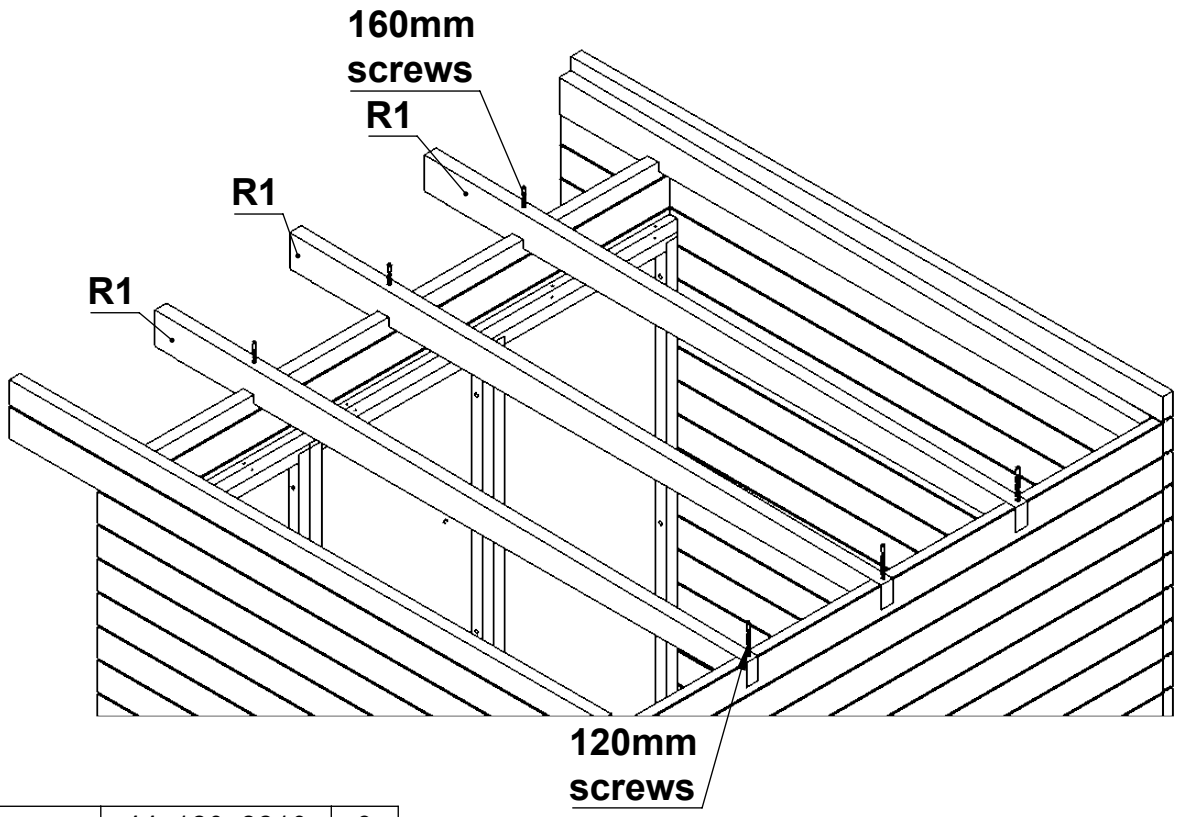

R1	44x120x2210	3
R2	44x120x2170	2
80mm screws		20
120mm screws		3
160mm screws		3

Use 40mm round head screws to connect joist hangers to the rafters 1

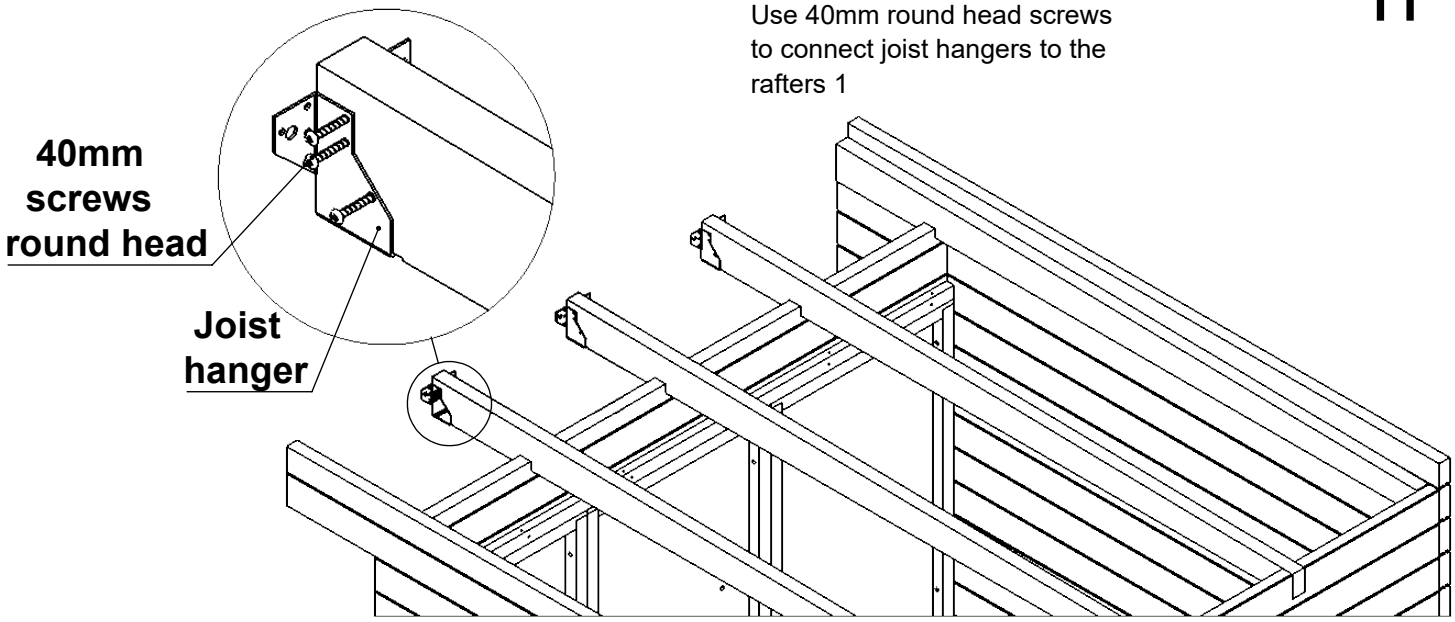

Joist hanger		3
40mm screws	round head	18

Fix the front beam to the rafters using 40mm round head screws. From the left side beam sit on the side wall log. Connect with 90mm screws.

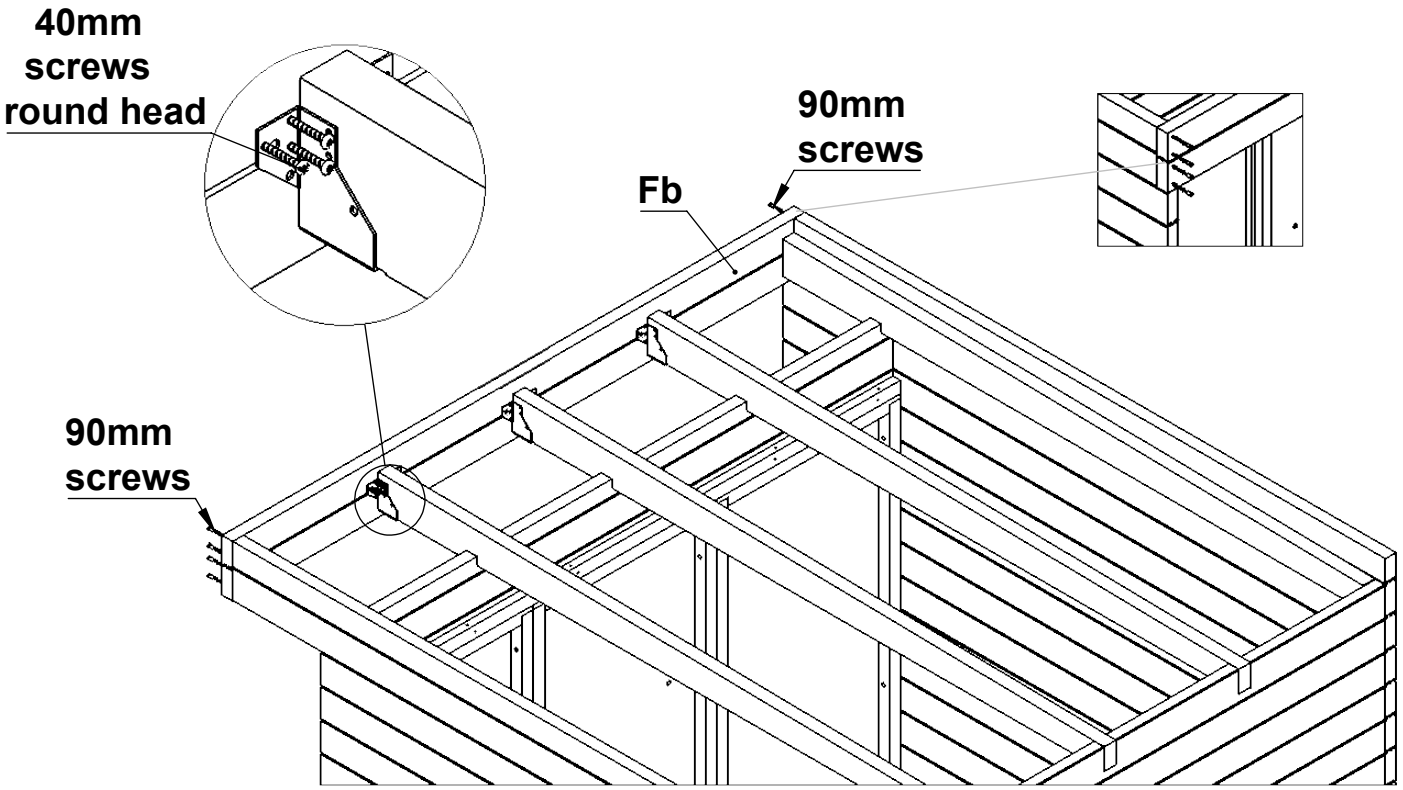


Drill the pilot holes for the screws

Front beam	40x194x2138	1
40mm screws	round head	18
90mm screws		8


Drill the pilot holes for the screws

Use 70mm screws to connect details Cbh to the front beam and front wall details. Details must be in same line from bottom with rafters.

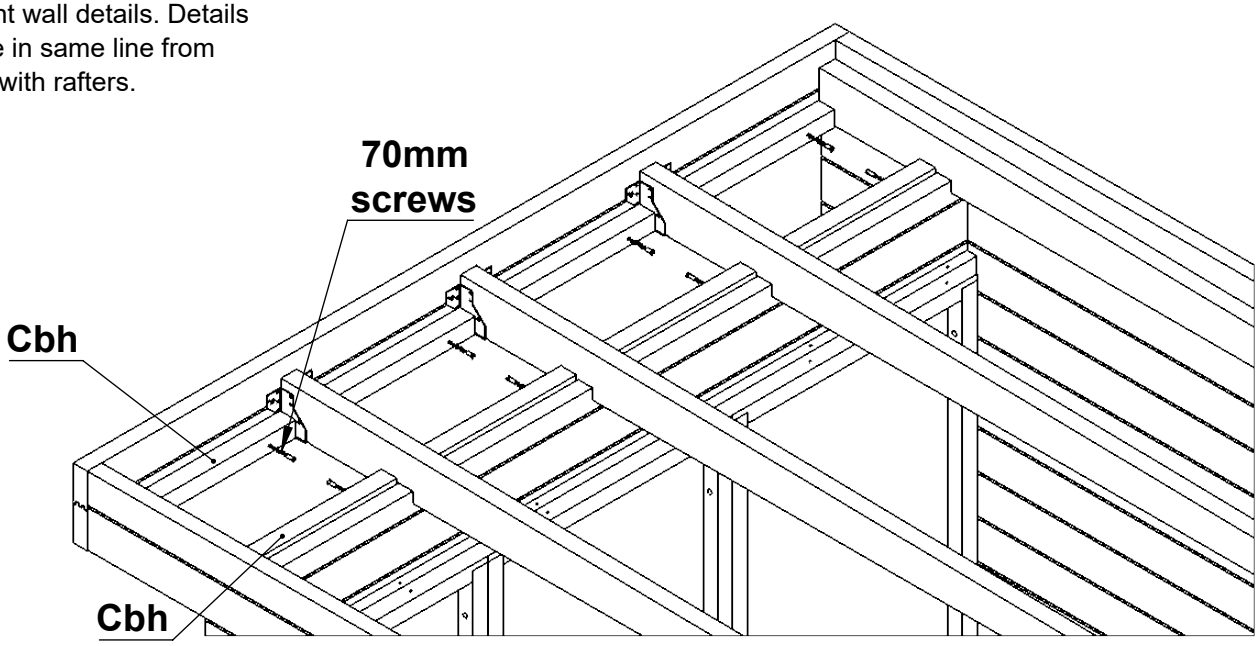

Cbh	44x44x450	8
70mm screws		16

Install the roof boards using 50mm nails. (10 nails per every roof board) Start the assembly from front side. Cut the last board to width, using circular saw. Last board must be flush with back wall.

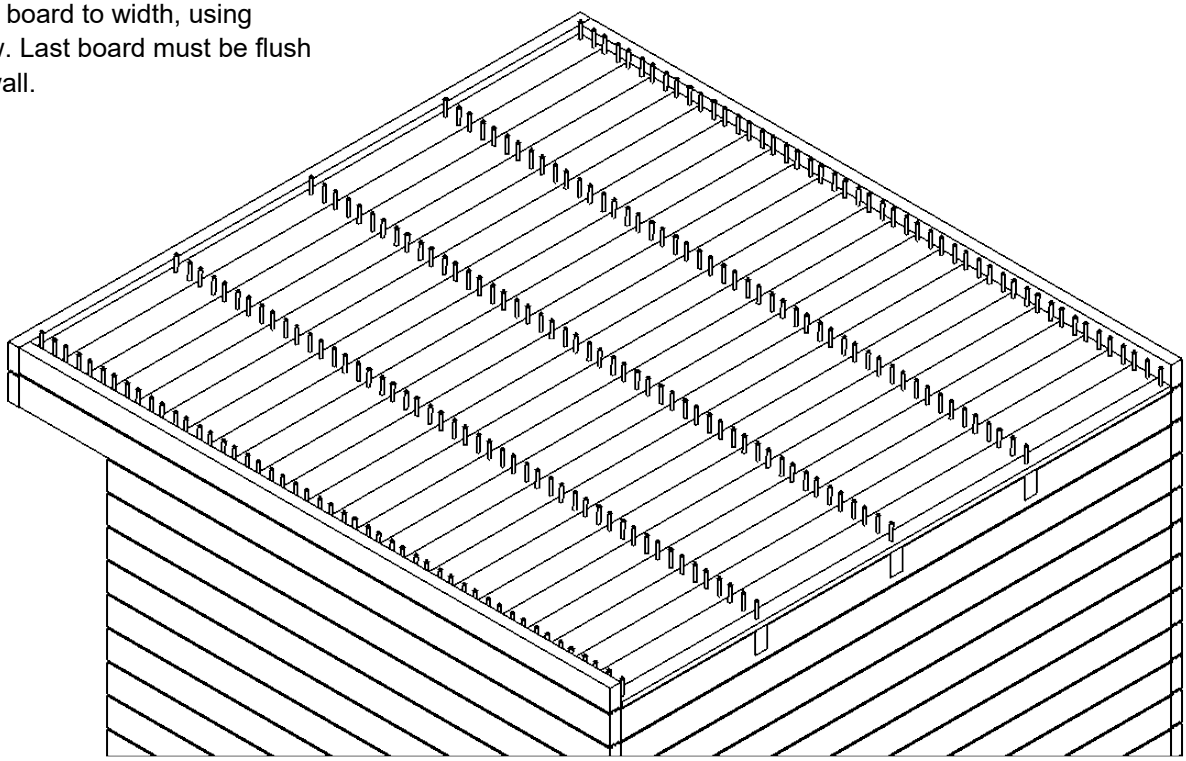

Rb	19x97x2052	25
50mm nails		250

Cut the SPU insulation panels to the right size using cutting knife. Attach the panels to the rafters using a few 70mm screws. Tape all edges and joints with foil tape to prevent heat loss.

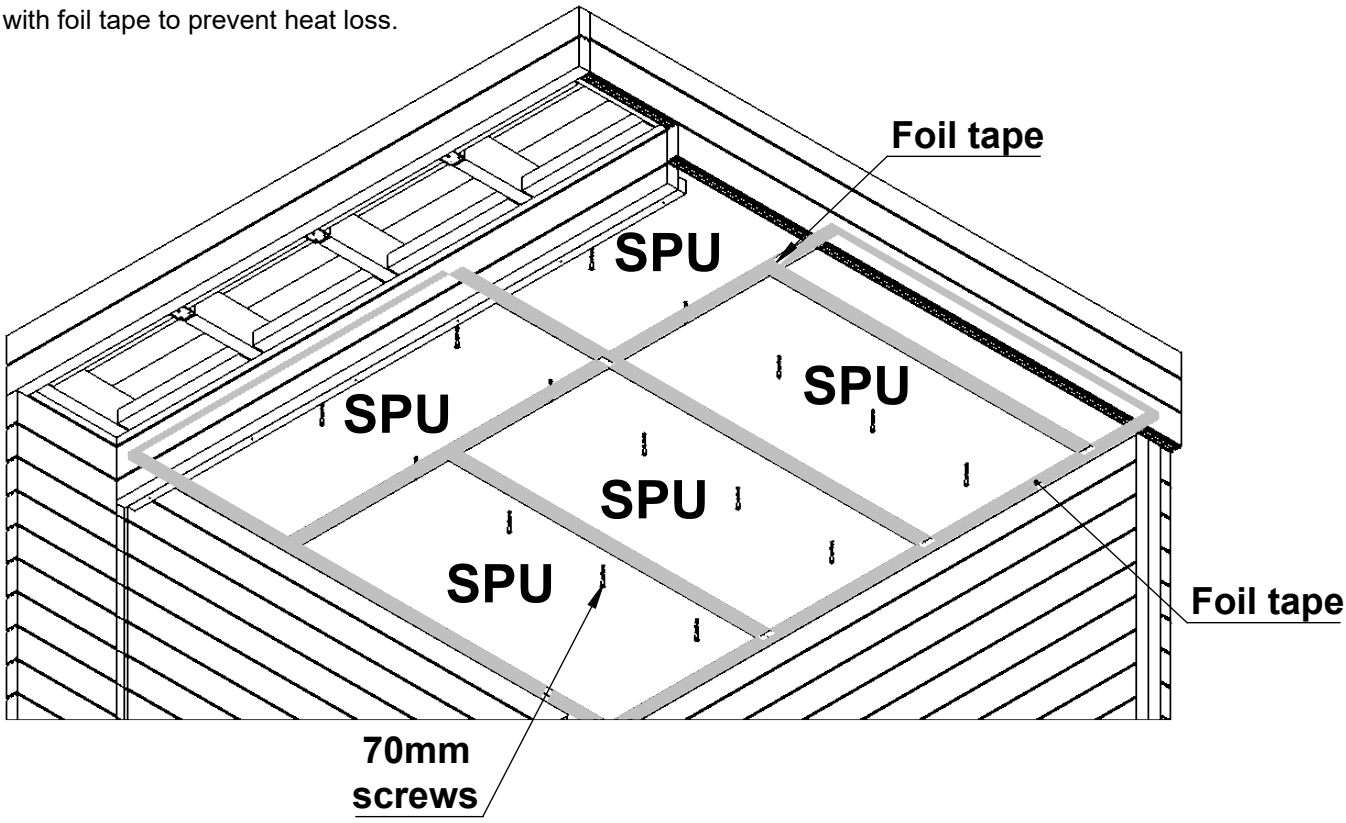

Spu panels	30x600x1200	6
Foil tape		1
70mm screws		20

Place the Cdb ceiling distance boards on top of the insulation panels and fasten them to the rafters with 70mm screws.

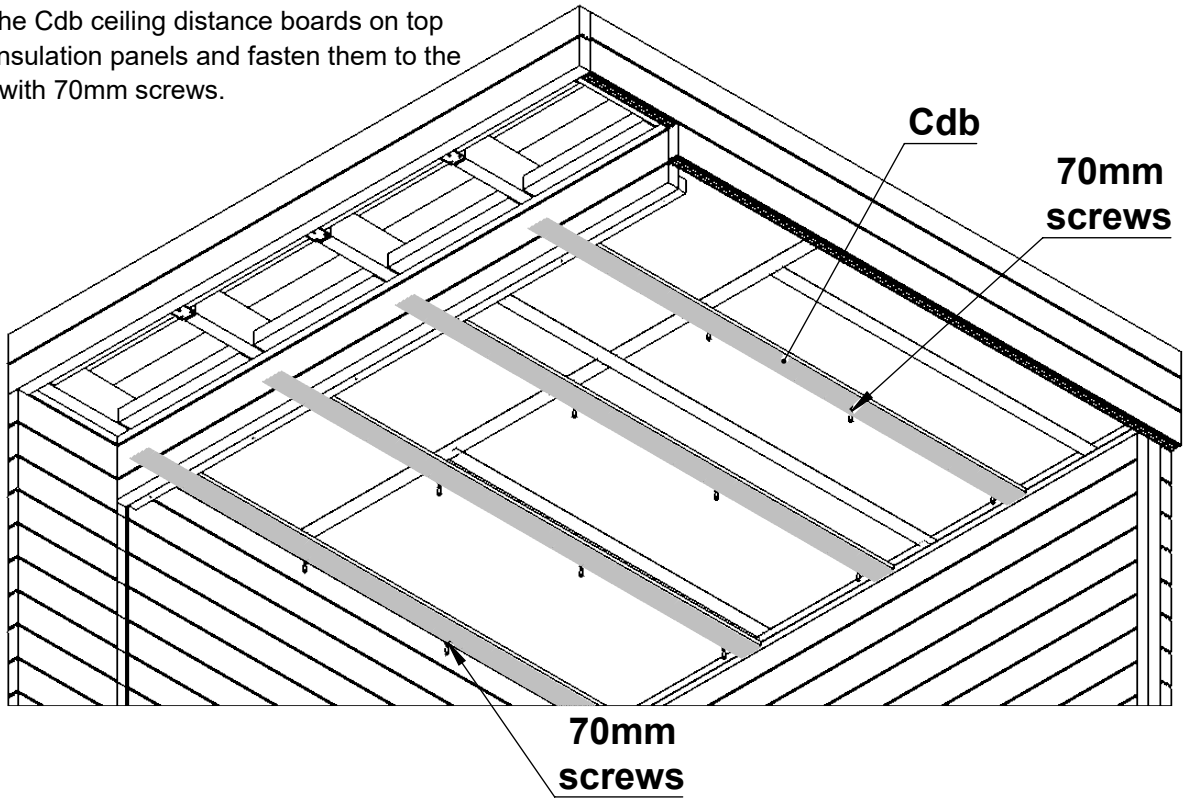

Cdb	13x70x1794	5
70mm screws		20

Install the ceiling boards on top of the distance boards. Leave ~3 mm gap between the ceiling boards and the walls on all sides. Use 40 mm lost-head nails (5 per every ceiling board) and a hammer or nail gun for fixing. Cut the last ceiling board to width using a circular saw.

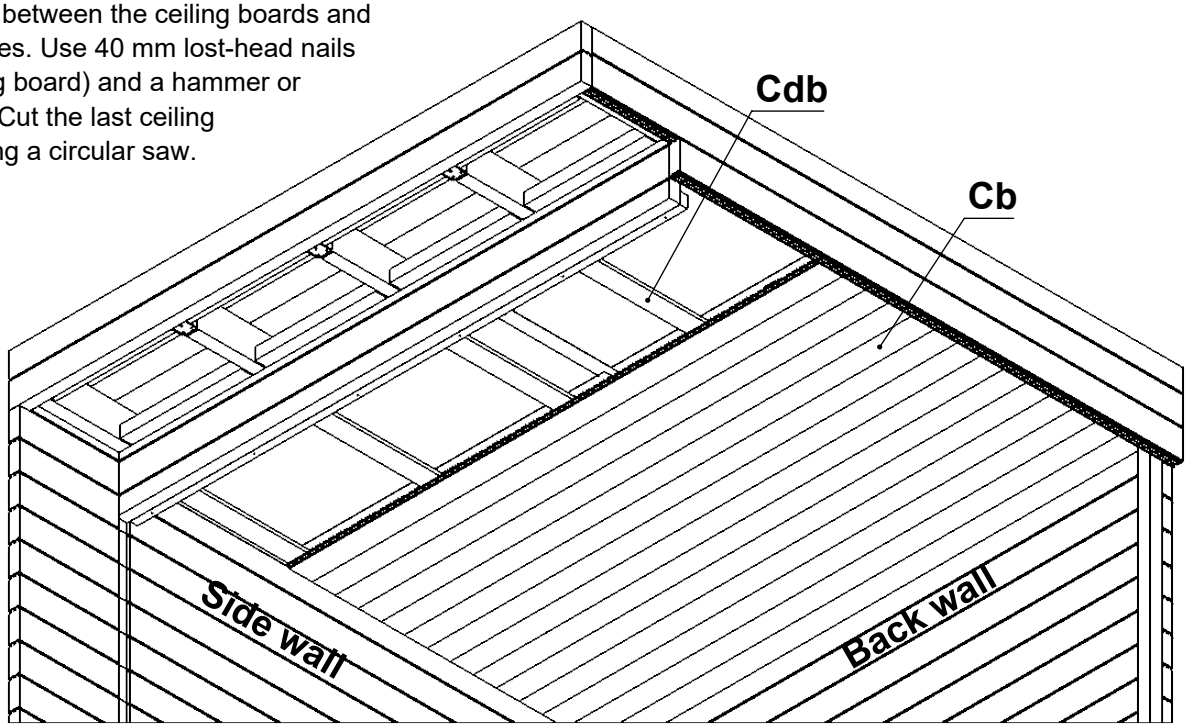

Cb	18x94x2052	21
40mm nails	Lost head	105

Use 40mm lost head nails or nailgun to connect all ceiling boards (2 nails per board). Cut the last boards to width.
Use 40mm screws (black) to connect cover slats Cs12 and Cs13.

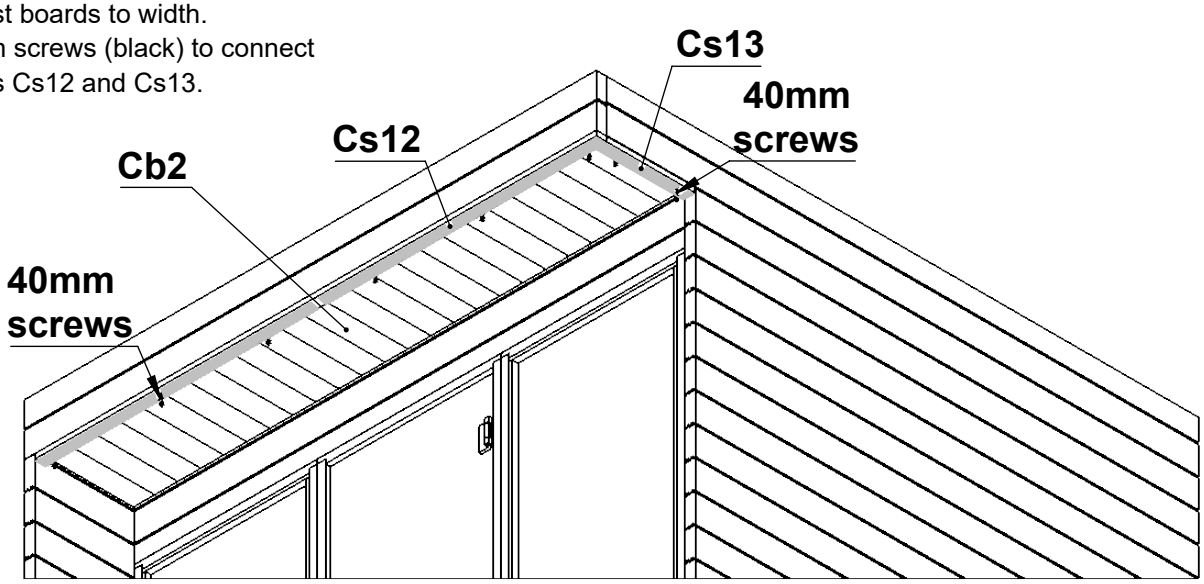

Cb2	18x94x326	24
Cs12	18x40x2098	1
Cs13	18x40x328	1
40mm nails	lost head	48
40mm screws	black	8



Drill the pilot holes for the screws

Install the floor boards.
Leave 3mm gap between the floor boards and walls at all sides. Use 45mm screws to fix the floor boards.
Pre-drill holes for the screws.
Last board cut the width with circular saw.

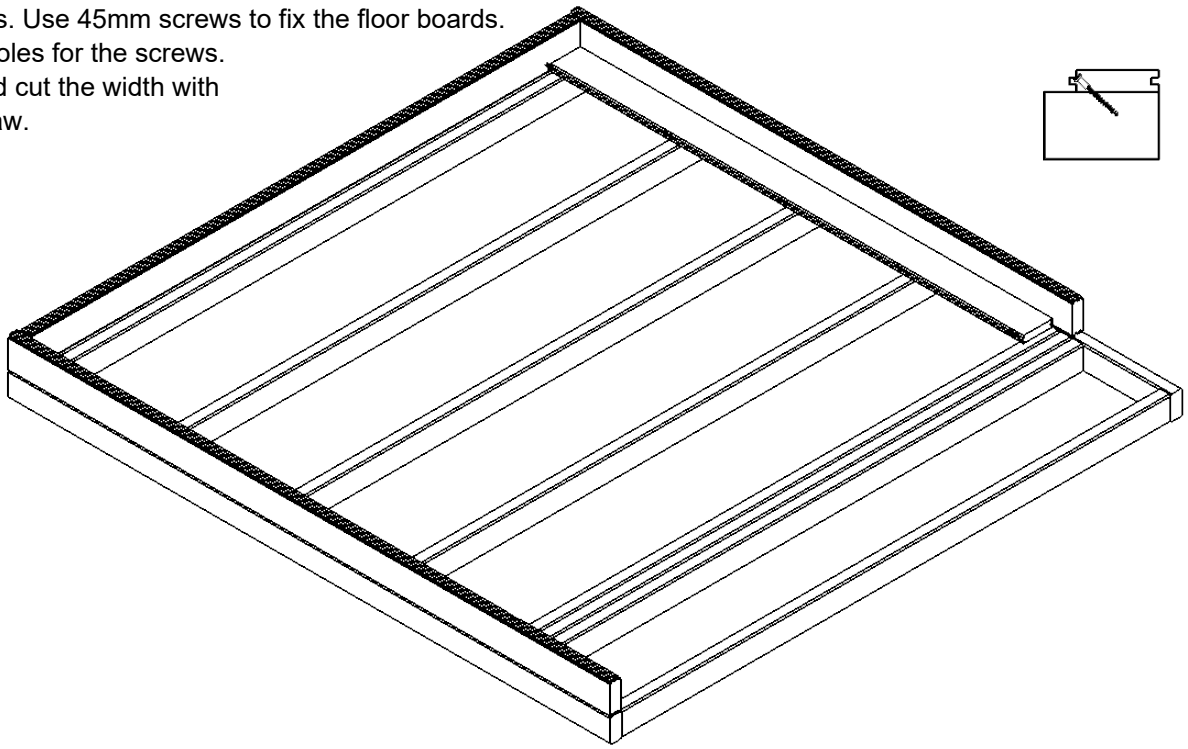



Drill the pilot holes for the screws

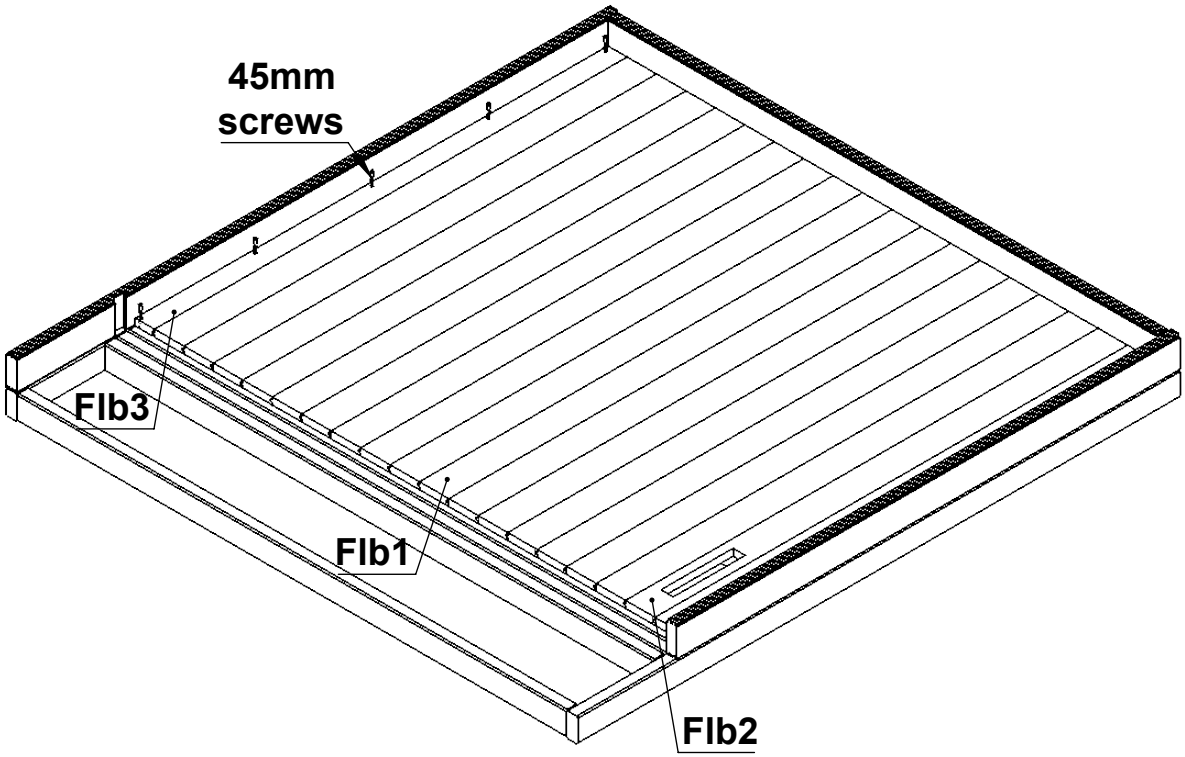

Flb1	26x117x1766	17
Flb2	26x117x1766	1
Flb3	26x72x1766	1
45mm screws		95

Cut the ventilation holes in the back wall with a diameter of 100mm using a hole saw or a jigsaw.

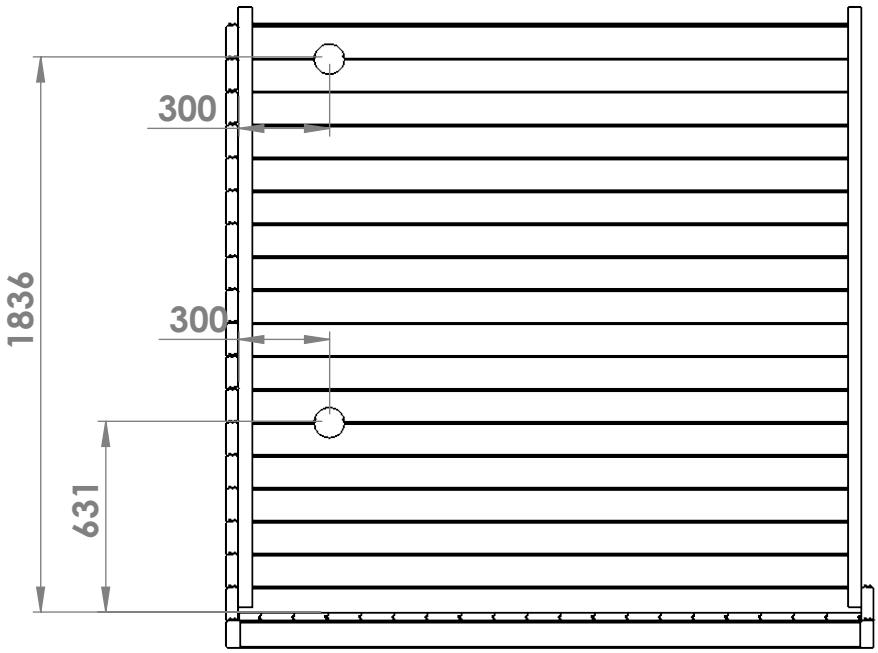

Measure the distance and fix the upper and lower bench supports to the walls. Use 70mm screws. Install the ventilation covers.

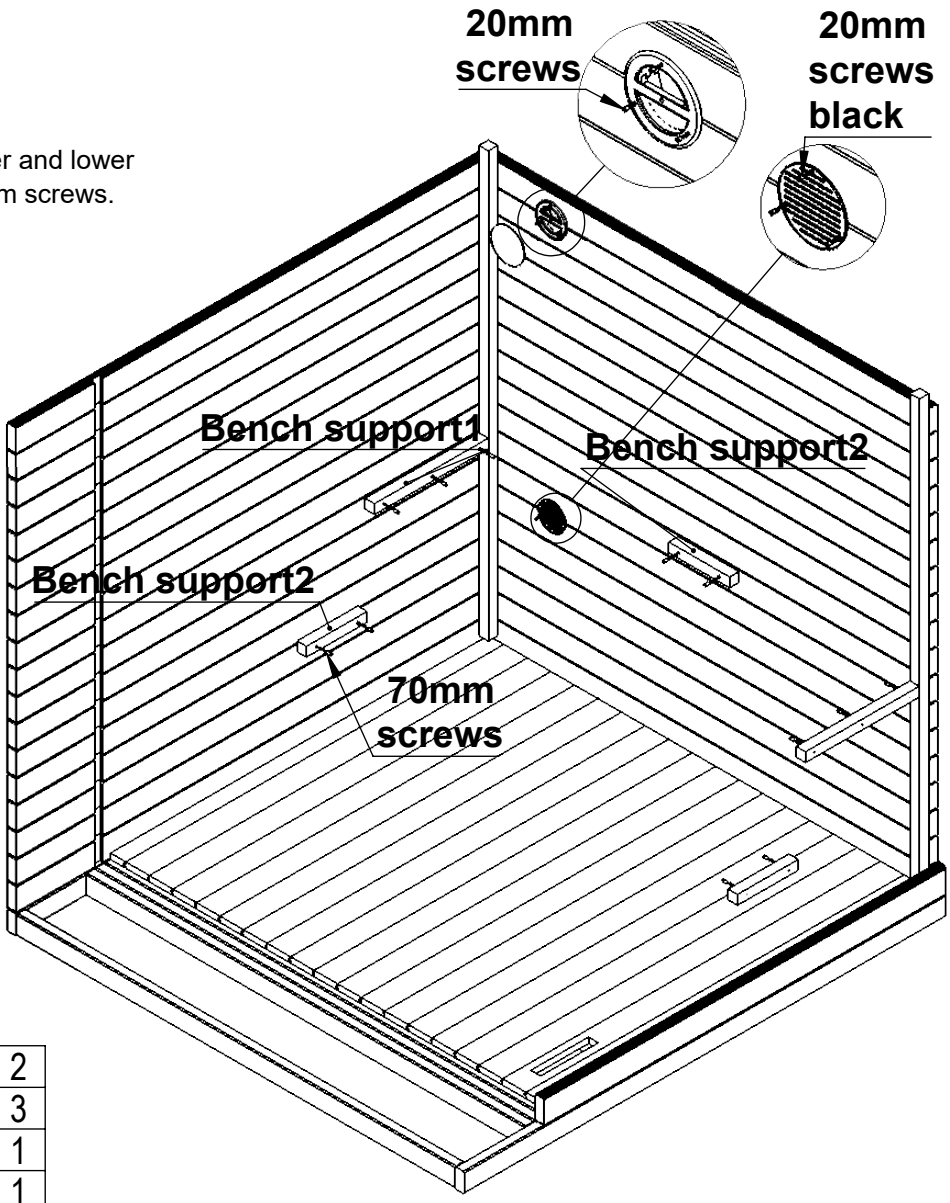

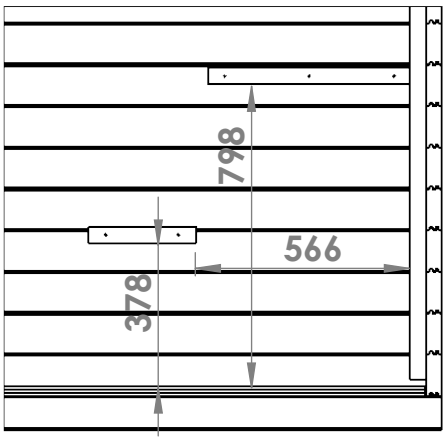

Bs1	44x44x532	2
Bs2	44x44x284	3
Vent cover	wooden	1
Vent cover	metal	1
70mm screws		12
20mm screws		6

Lift and place the benches on top of the supports.Leave 5 mm gap between the benches and the walls. Fix all the benches to the supports through the bench's bottom frame, using 70 screws.
Do not fully tighten the screws.
Assemble backrest to the comfortable height, about 250mm from bench.
Use 90mm screws.

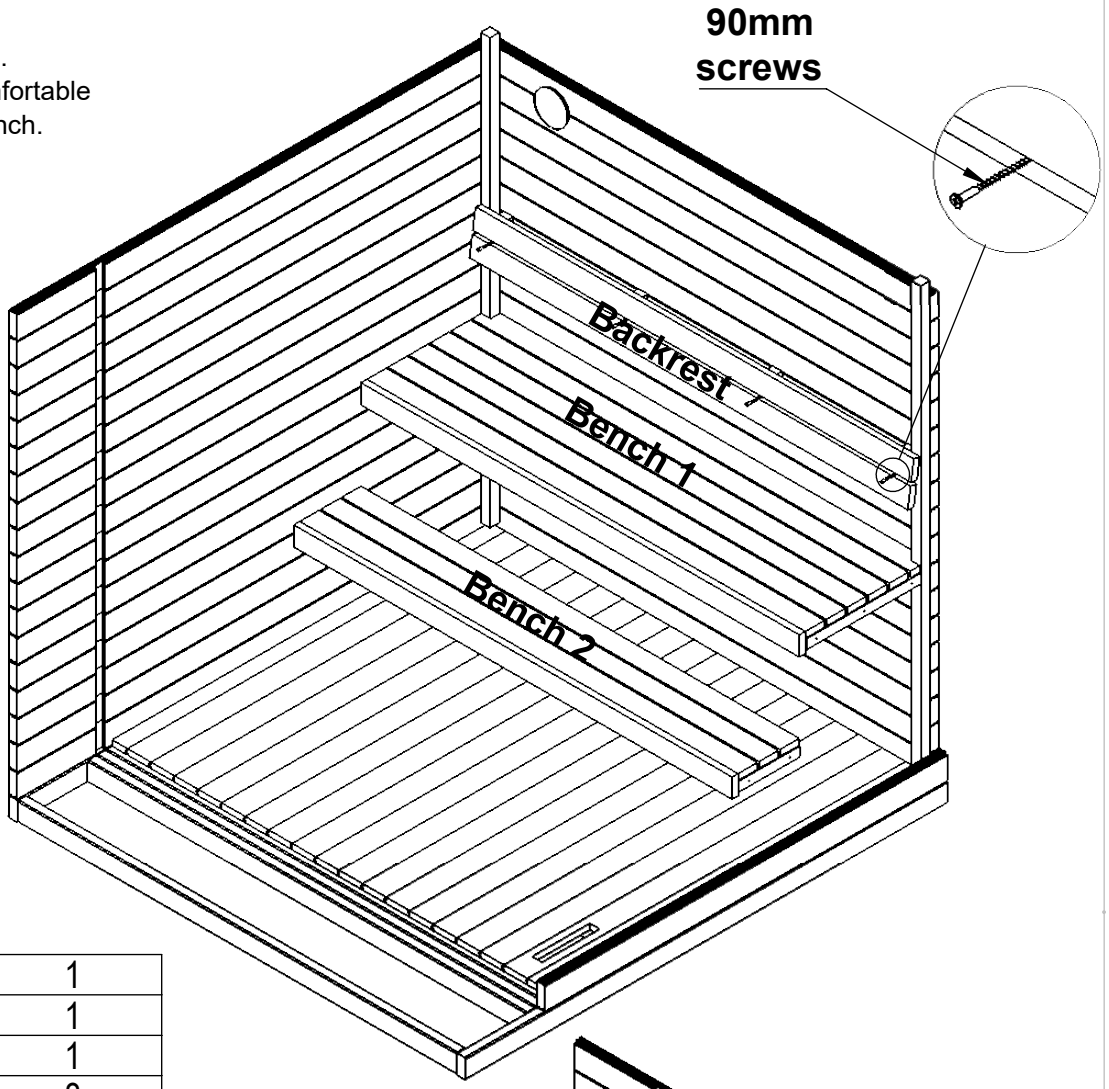

Bench 1	608x2048	1
Bench 2	314x2048	1
Backrest	190x2048	1
70mm screws		8
90mm screws		4

Use 60 mm screws to connect bench support element to the window frame.

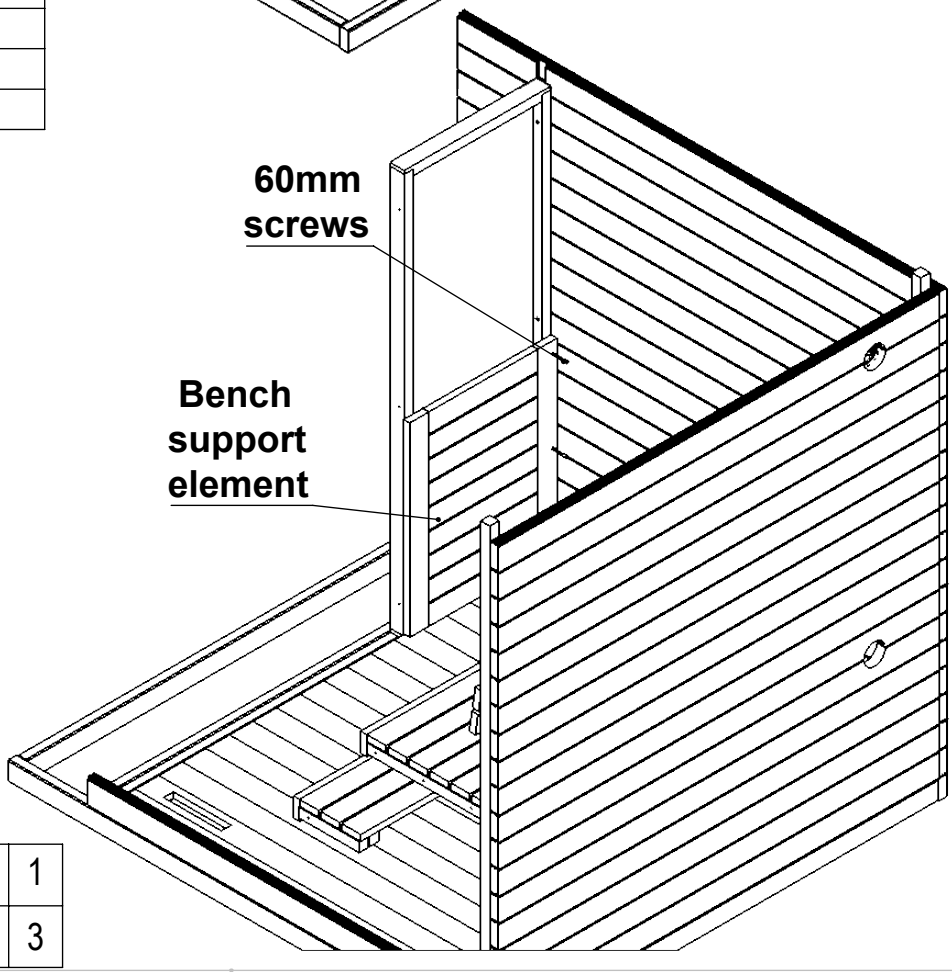

Bench Support Element	686x870	1
60mm screws		3

Use 70mm screws to connect bench supports Bs3 and Bs4 to the bench support element as shown below.

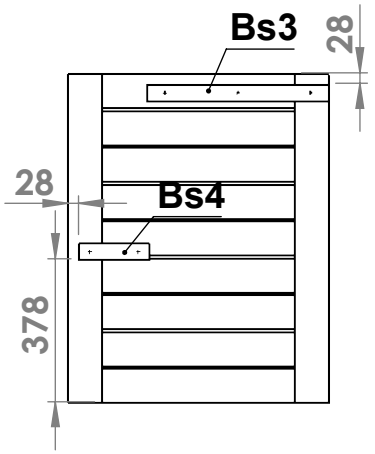

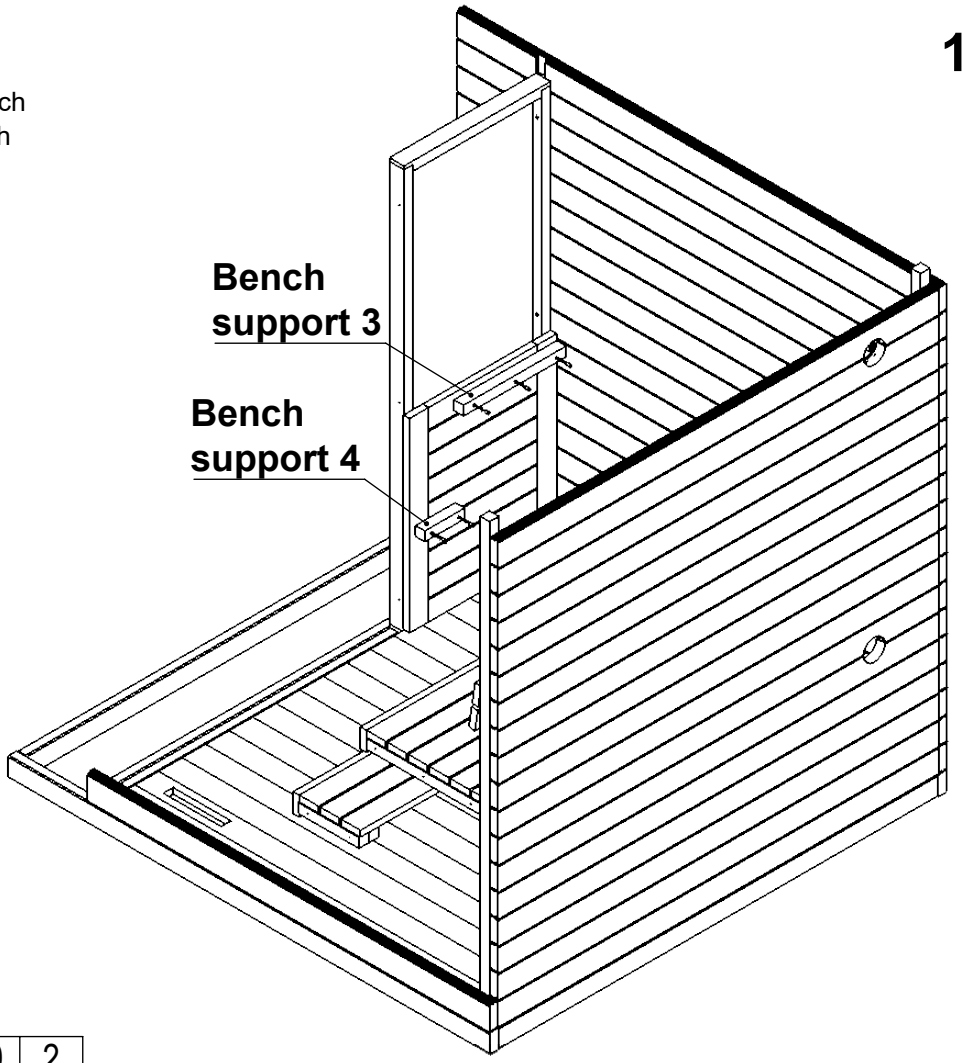

Bs3	44x44x480	2
Bs4	44x44x184	2
70mm screws		10

Use 70mm screws to connect bench supports Bs3 and Bs4 to the benches.

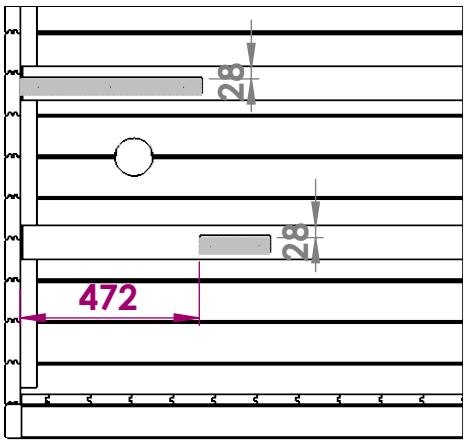

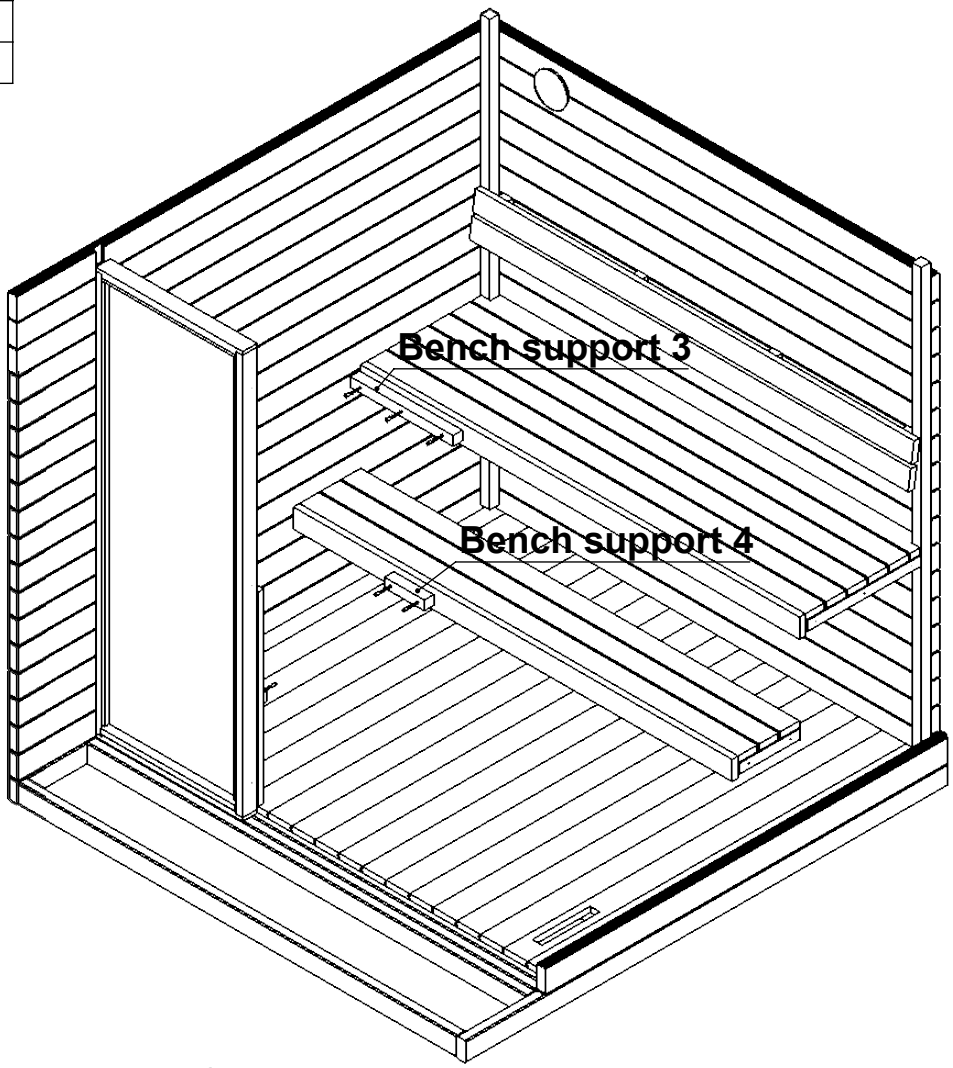

Lift and place the benches on top of the supports.Leave 5 mm gap between the benches and the walls. Fix all the benches to the supports through the bench's bottom frame, using 70 screws.
Do not fully tighten the screws.

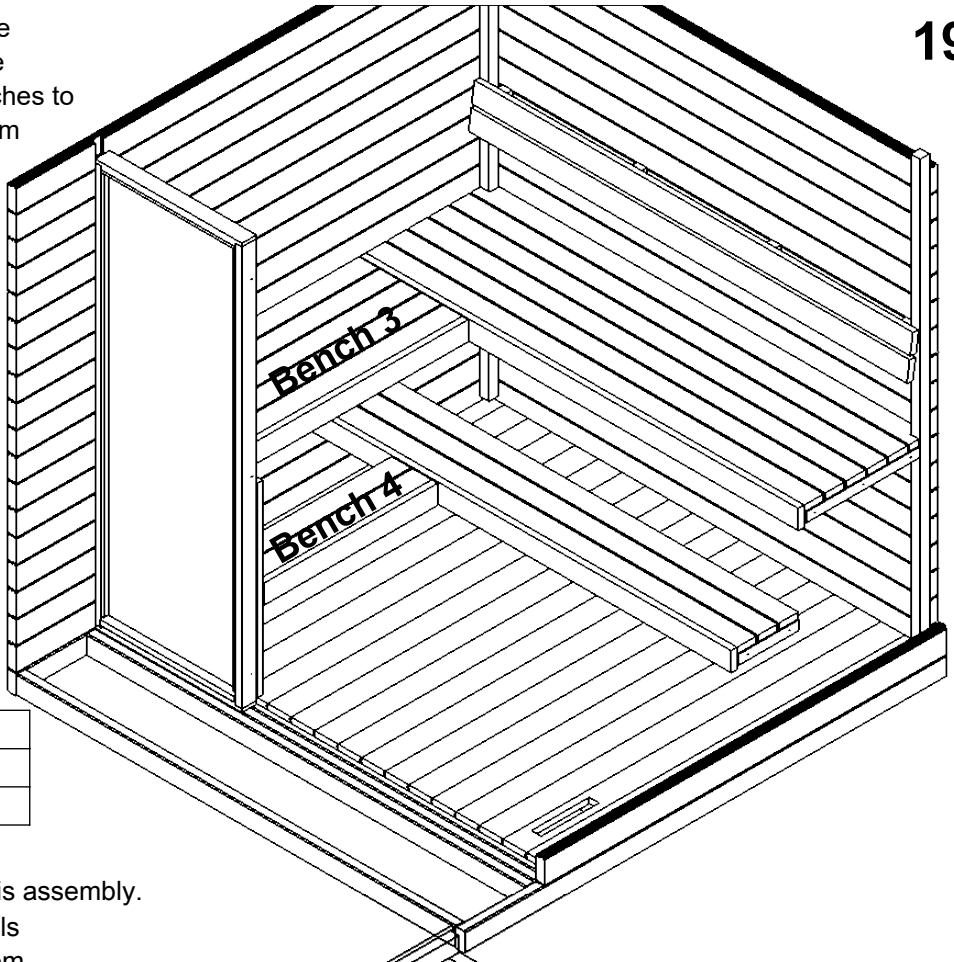

Bench 3	510x1128	1
Bench 4	226x812	1
70mm screws		8

Place the assembled terrace,s before this assembly.
Start the cover slats assembly with details Cs2 & Cs5. Cs2 must be flush with bottom of the floor supports. On upwards it must be flush with the upper edges of the side walls. Fasten with 40mm black screws. In next step fix cover slats Cs1 & Cs4.

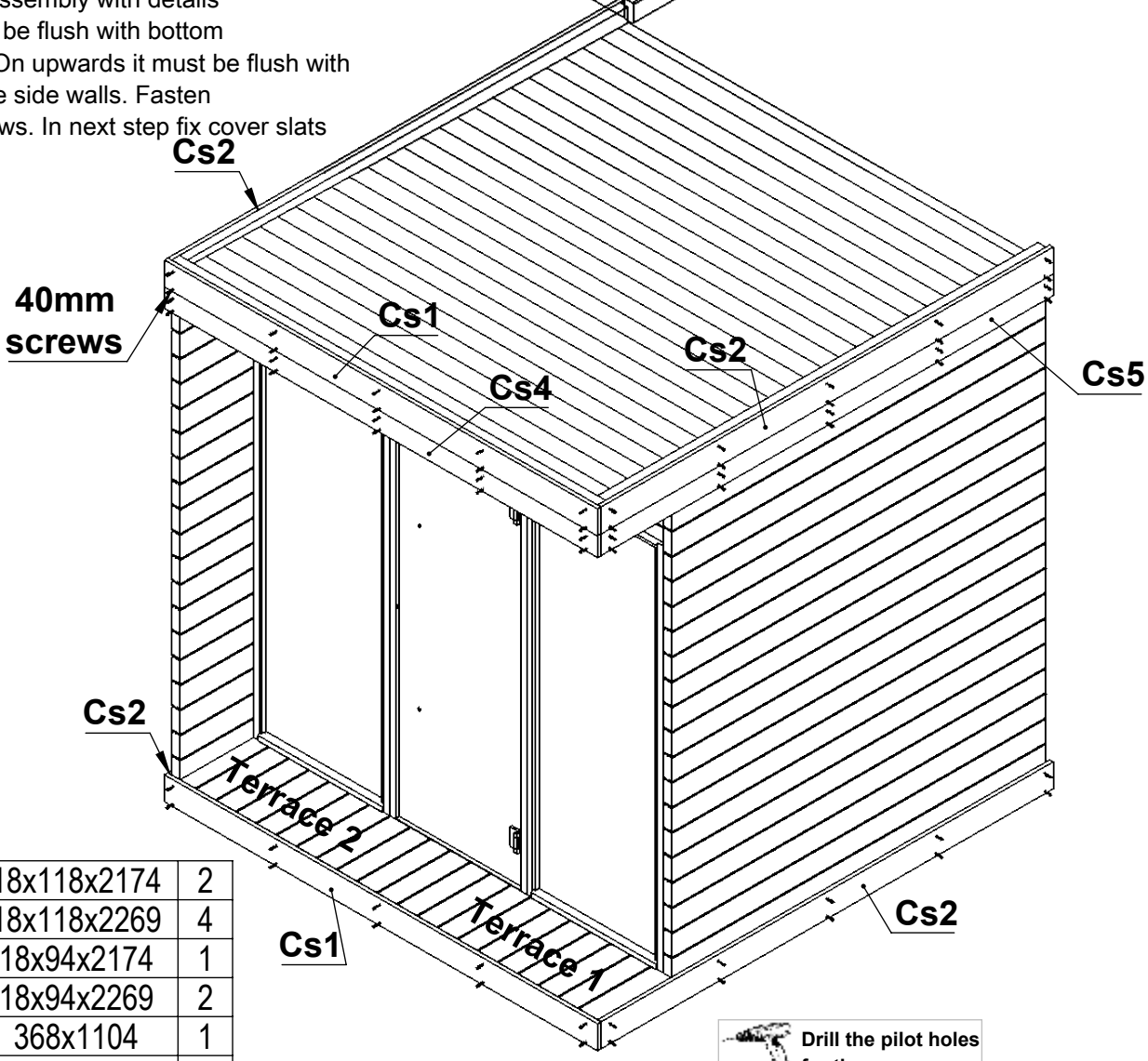

Cs1	18x118x2174	2
Cs2	18x118x2269	4
Cs4	18x94x2174	1
Cs5	18x94x2269	2
Terrace 1	368x1104	1
Terrace 2	368x984	1
40mm screws	black	90

Continue cover slats assembly in back side. Cs6 corner cutout must be flush with roof boards. Cut the detail`s Cs6 to the right length.

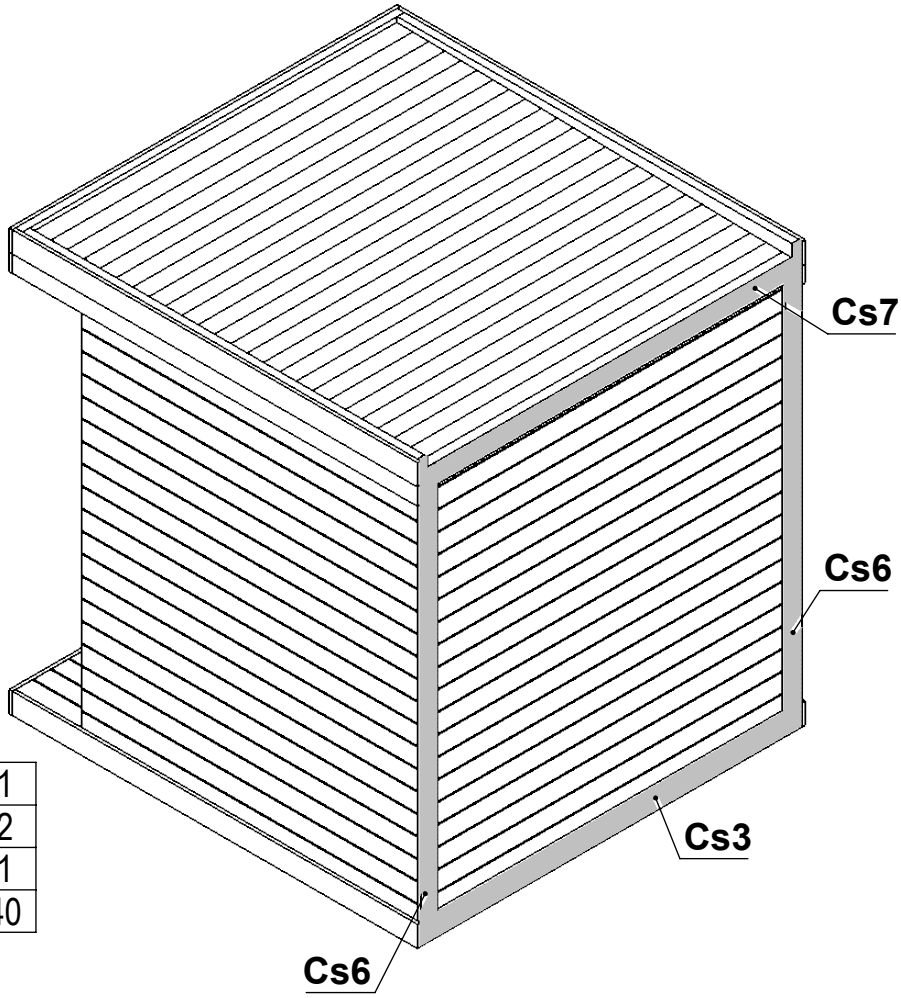

Cs3	18x118x2138	1
Cs6	18x94x2260	2
Cs7	18x94x1950	1
40mm screws	black	40


Drill the pilot holes for the screws

Cut the details Cs8 to the right length!

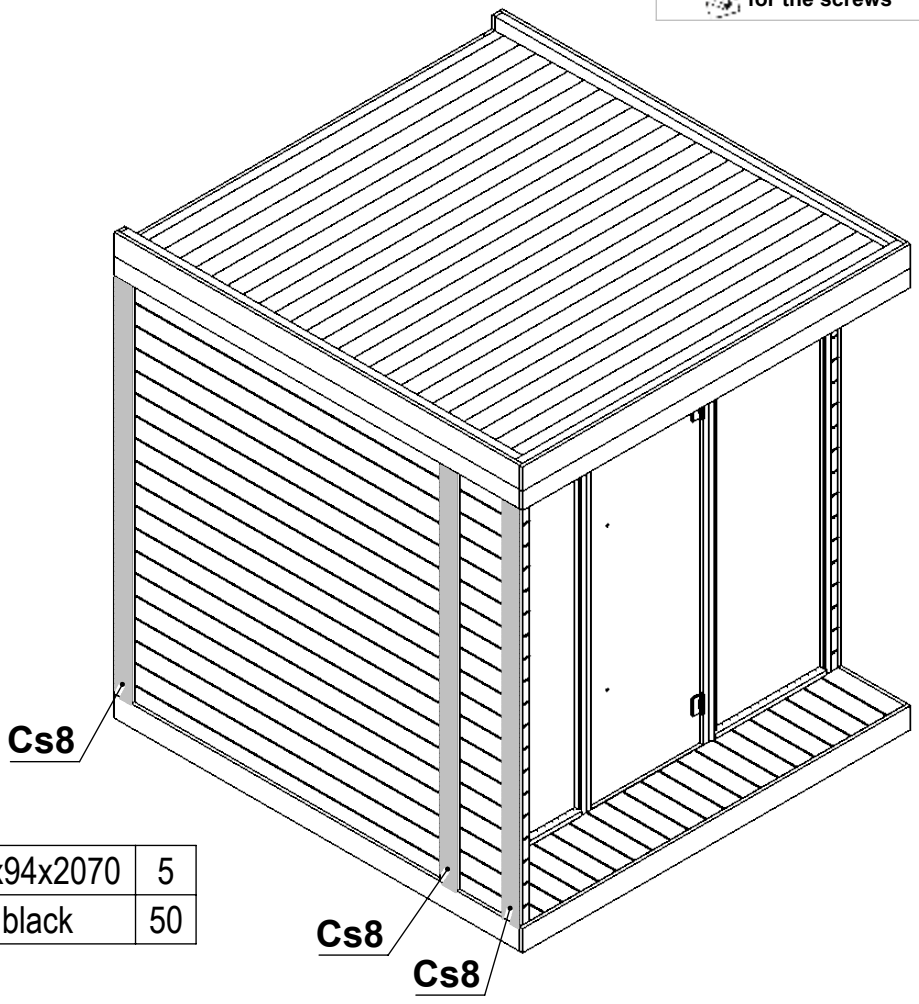

Cs8	18x94x2070	5
40mm screws	black	50

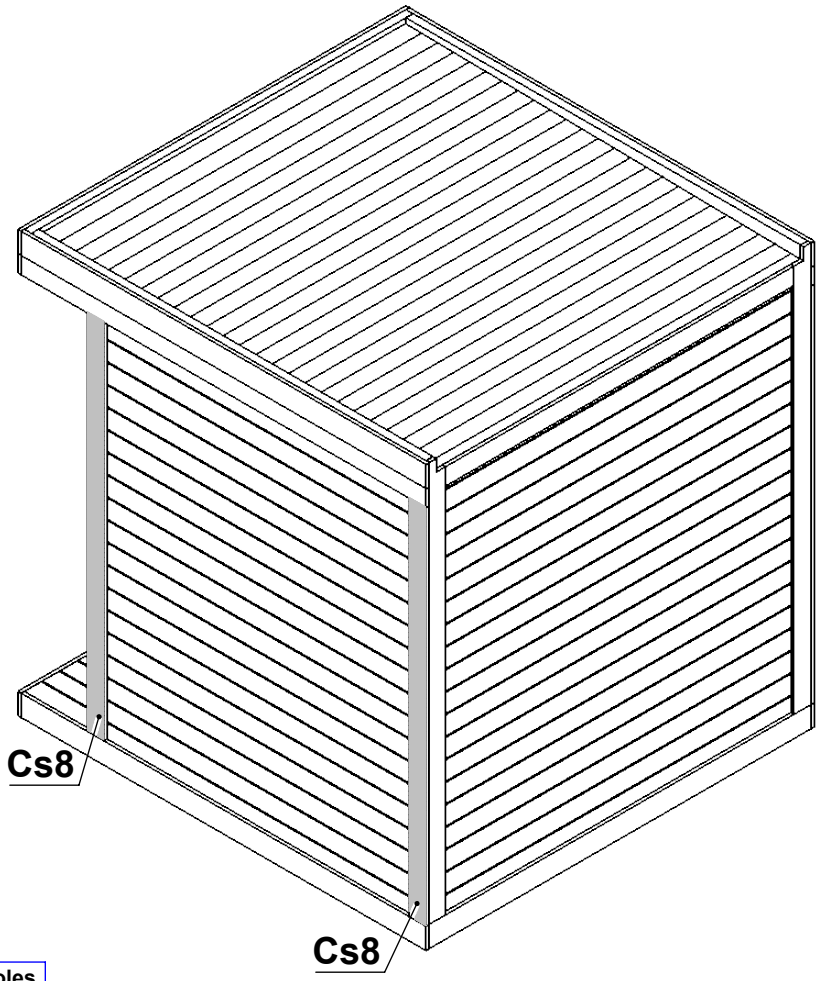

Drill the pilot holes for the screws

Cut the cover slats to the right length!

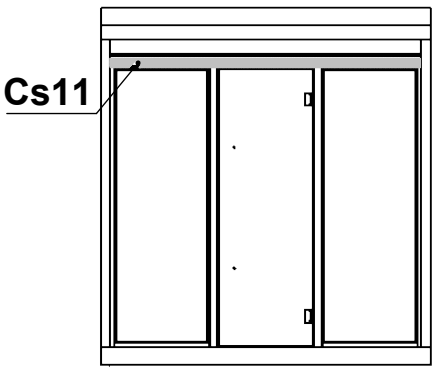

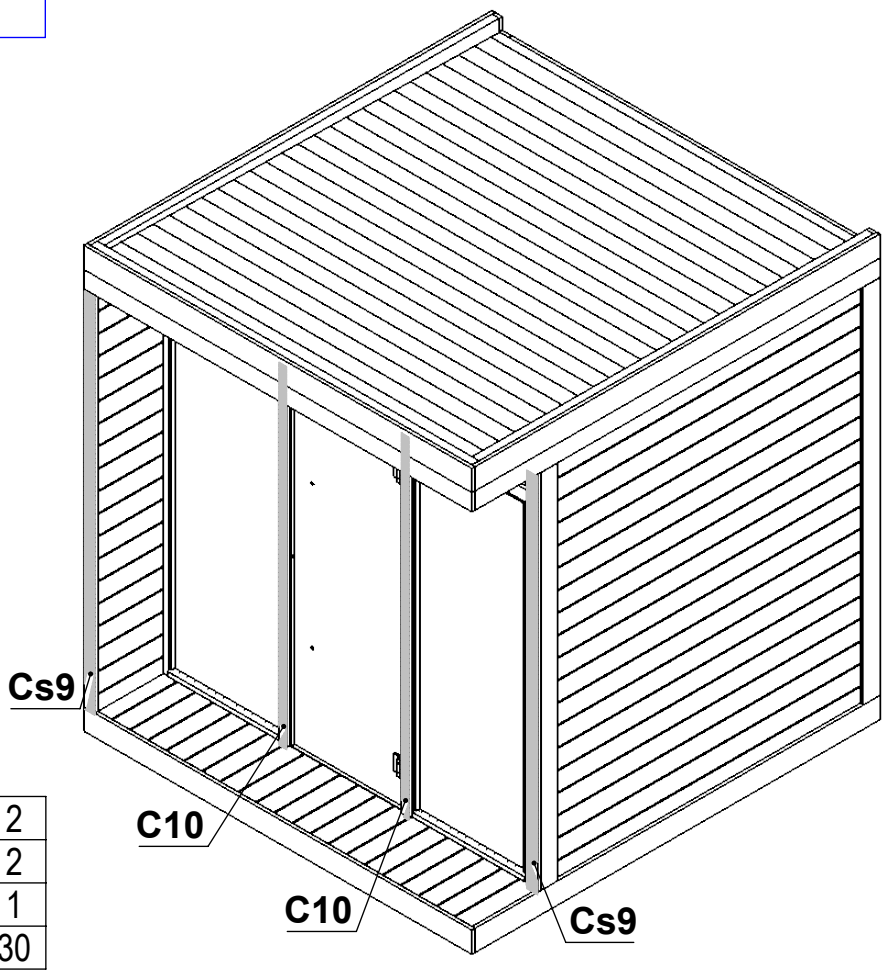

Cs9	18x62x2070	2
Cs10	18x45x1862	2
Cs11	18x62x2052	1
40mm screws	black	30

Attach the back wall roofing sheet to the roof boards using 4,2x25mm round head screws.

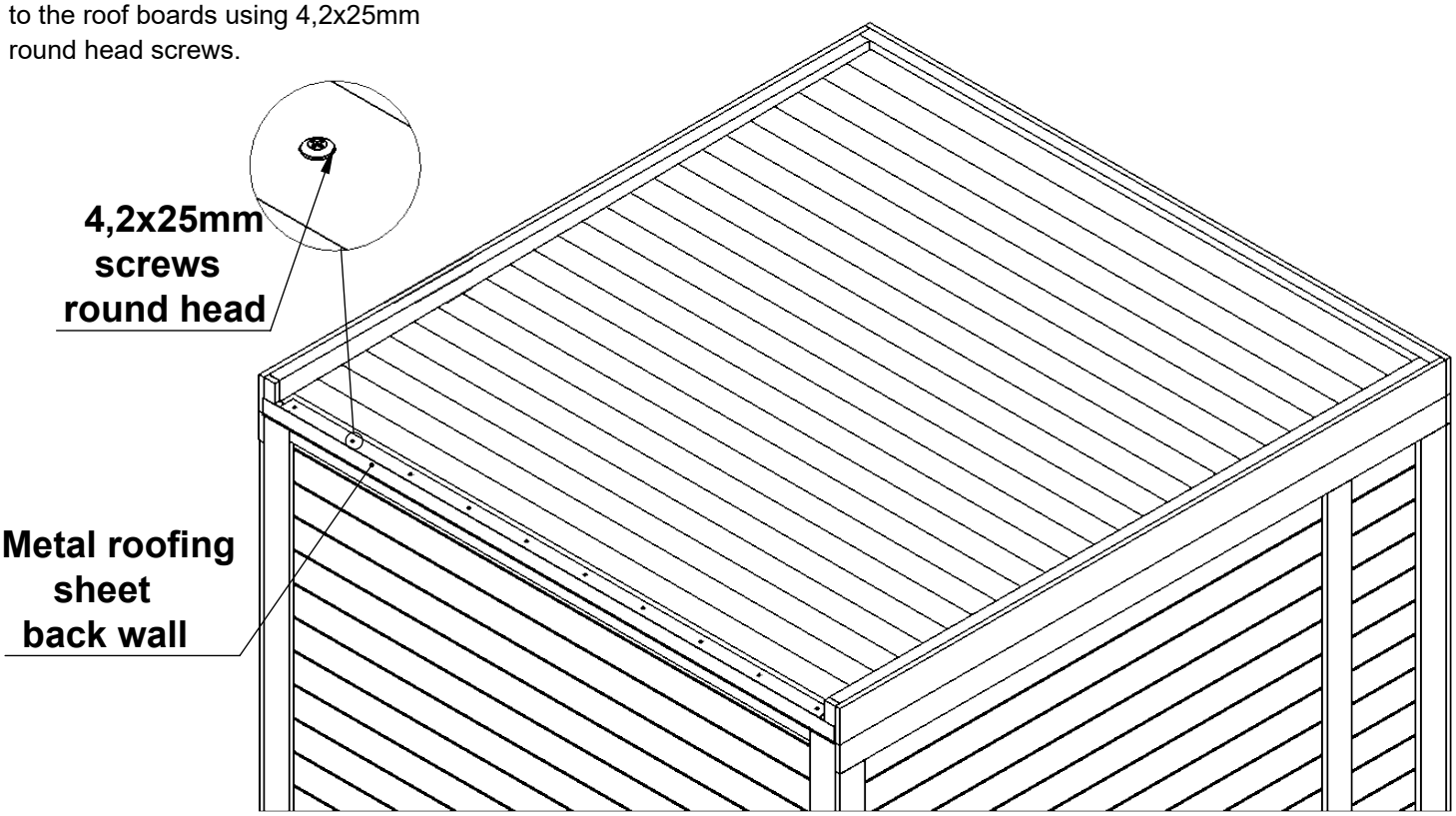

Metal roofing sheet	55x2150	1
4,2x25mm screws	round head	10

Take the roof material and cut 3 sheets about 2250mm. Start the assembly from backside of sauna. Put the first sheet of roof covering on the roof and carefully fold from side walls to up. Cut the excess rubber from top of the walls. In the same way attach second sheet of roof covering.

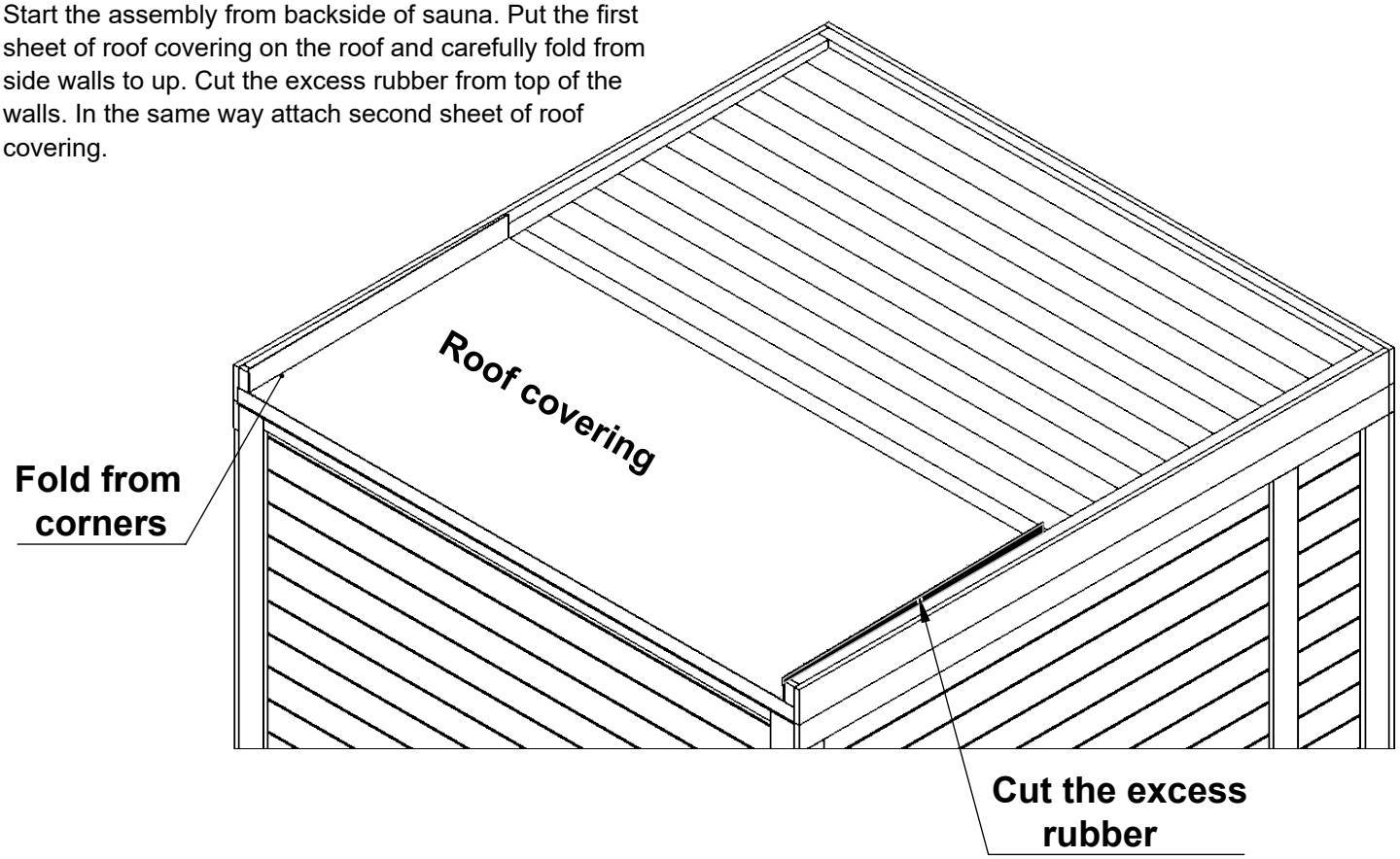

Cutting the last sheet of roof covering.

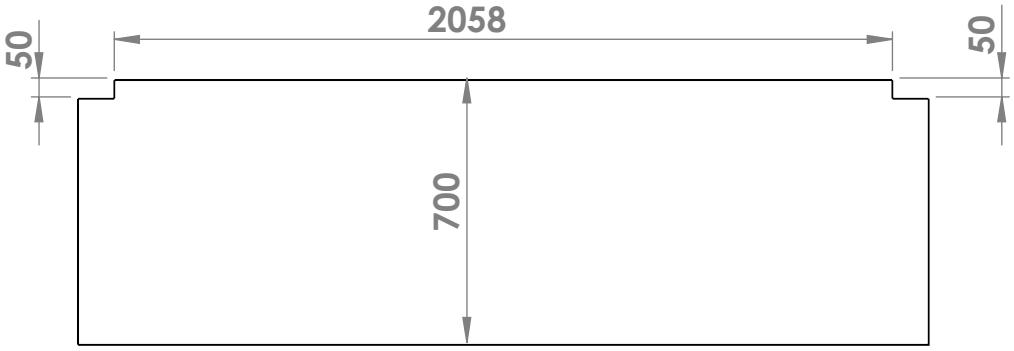

Put the last sheet of roof covering on the roof, carefully fold from side wall corners and from front beam corner. Cut the excess rubber.

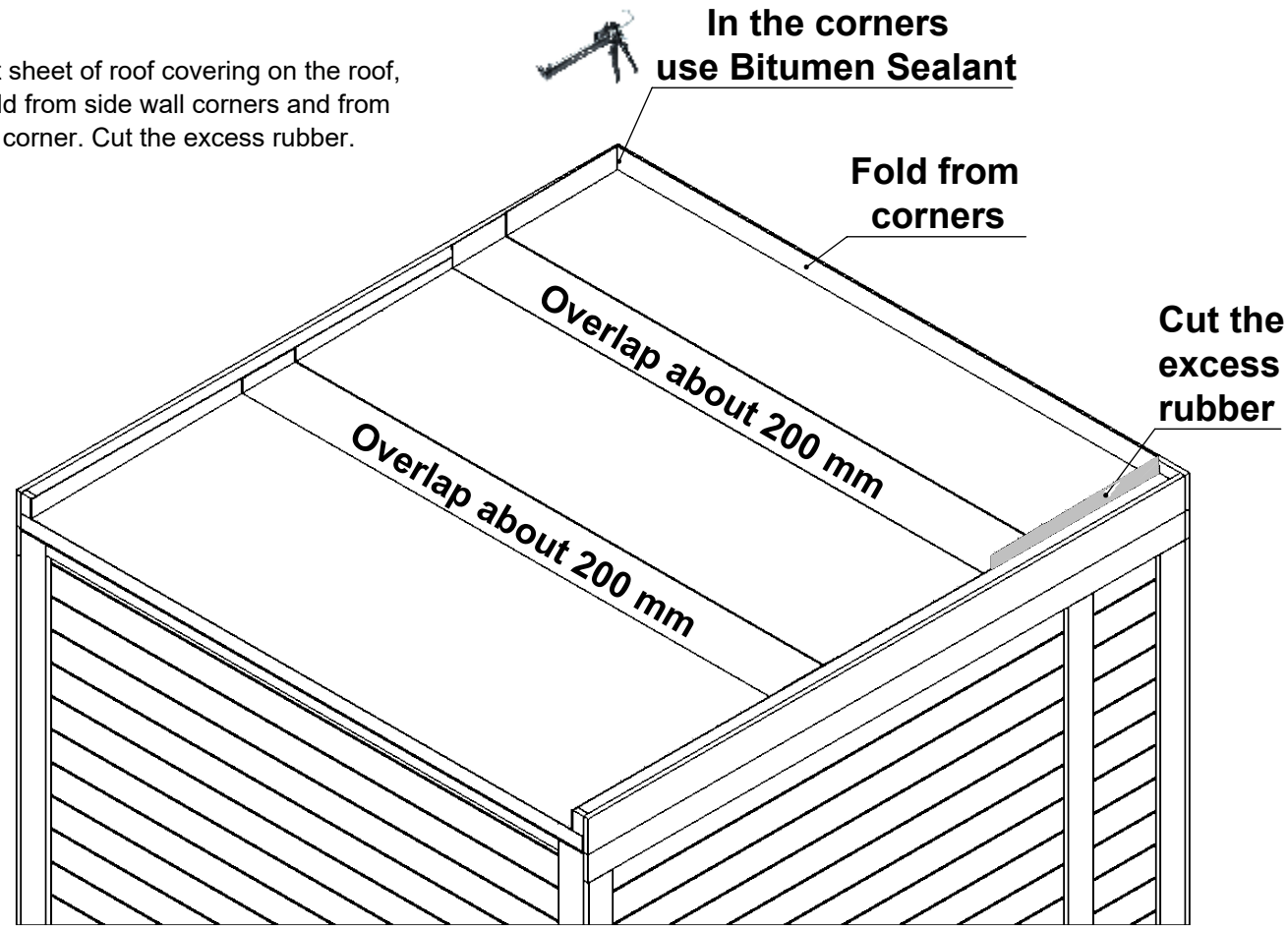

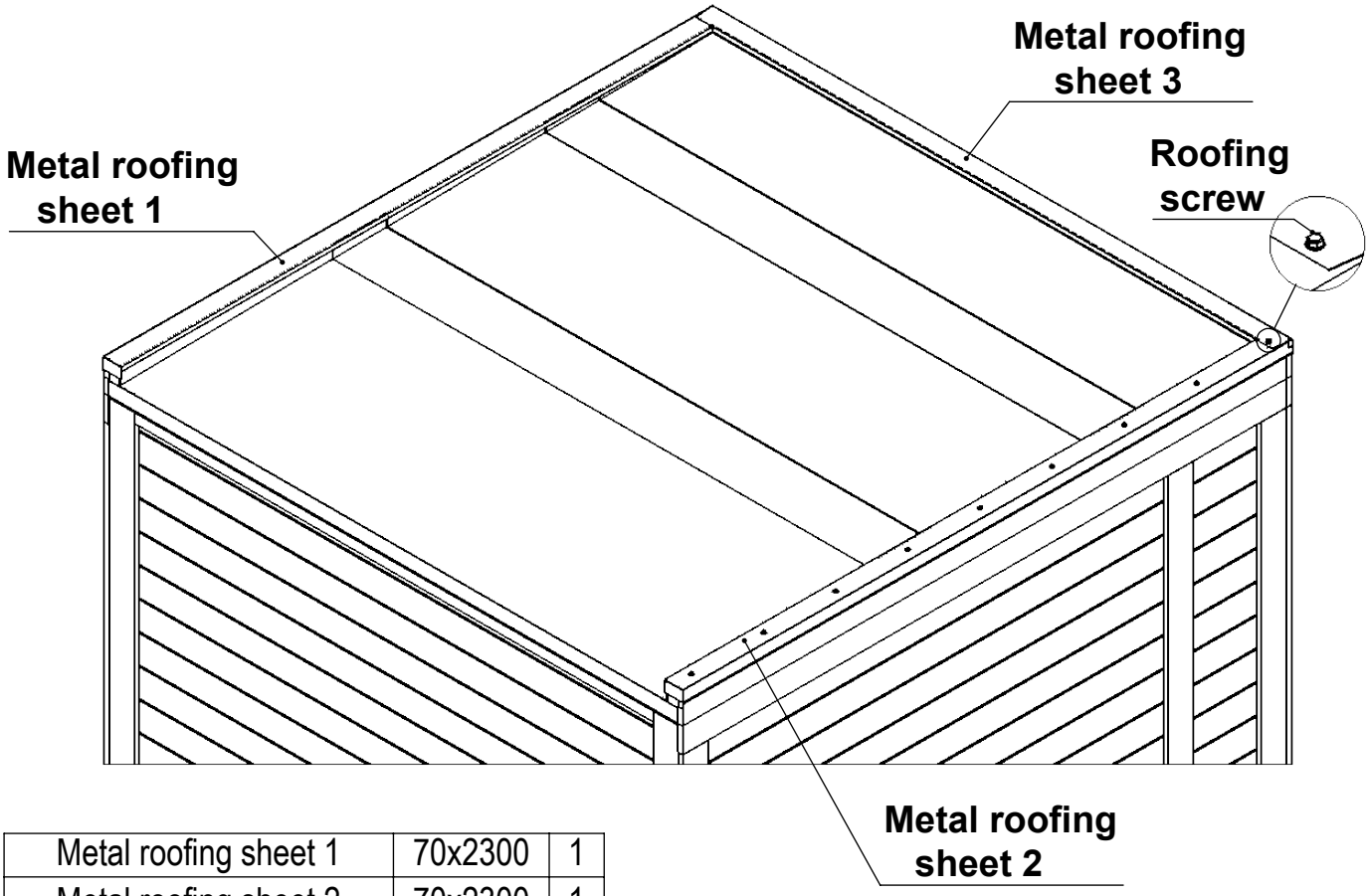

Metal roofing sheet 1	70x2300	1
Metal roofing sheet 2	70x2300	1
Metal roofing sheet 3	70x2200	1
4,8x25mm roofing screws		30

Connect the heater cover to the wall with 60mm screws. Perform this step only after heater is installed.

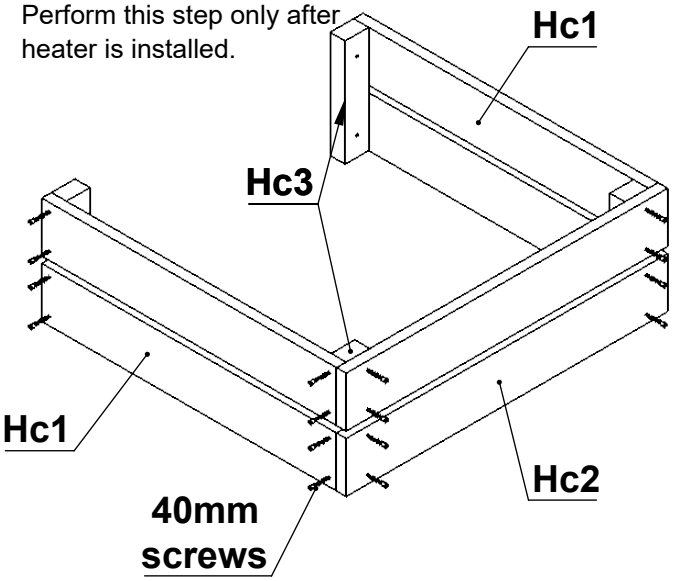

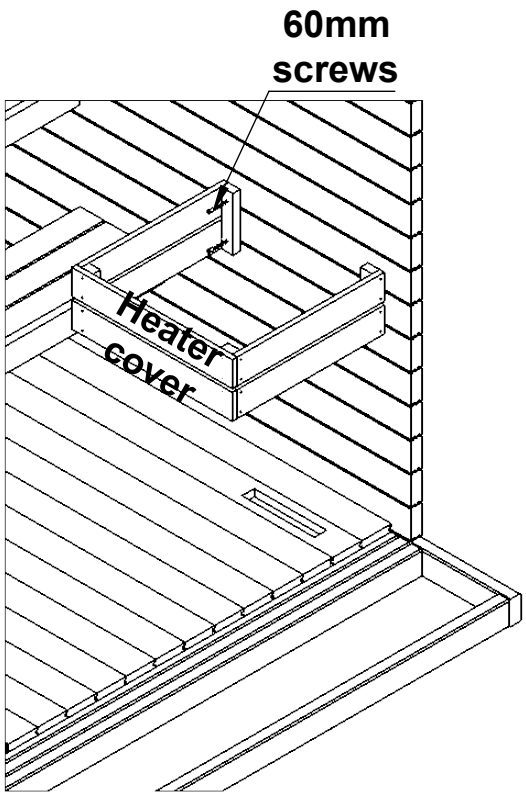

Hc1	18x94x550	4
Hc2	18x94x600	2
Hc3	28x44x200	4
40mm screws	black	24
60mm screws		4

Install the ventilation covers

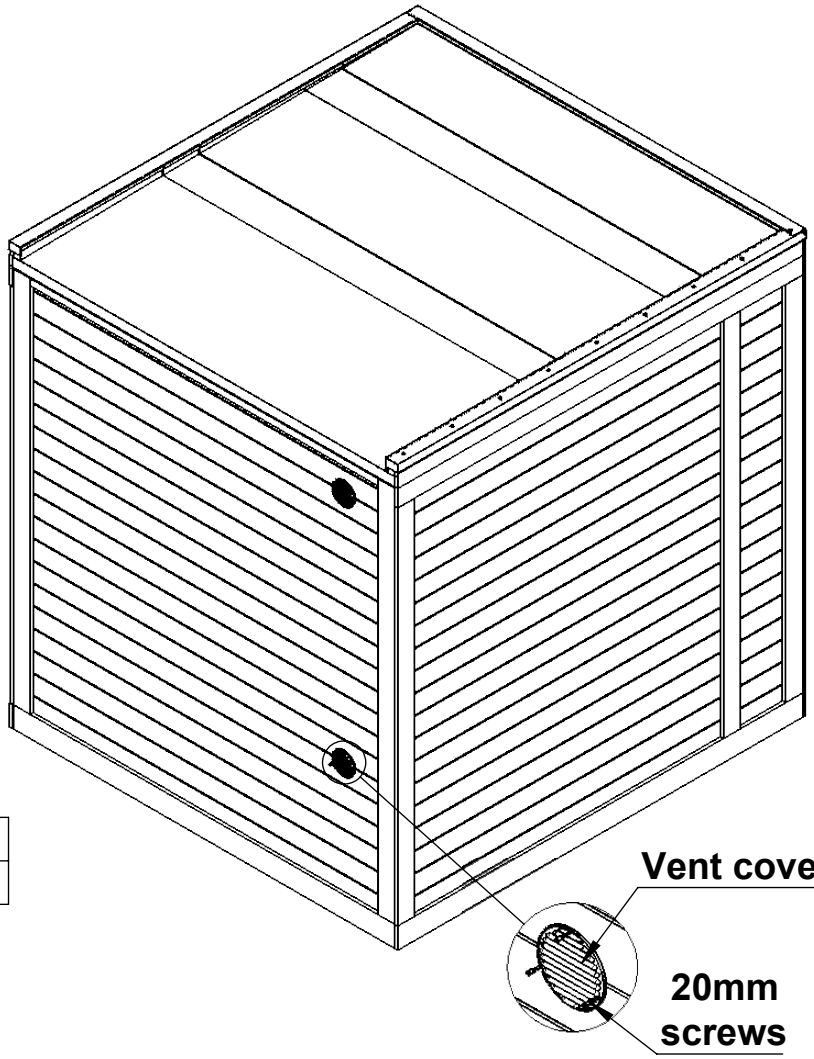

Vent cover	metal	2
20mm screws		6

Door handle assembly

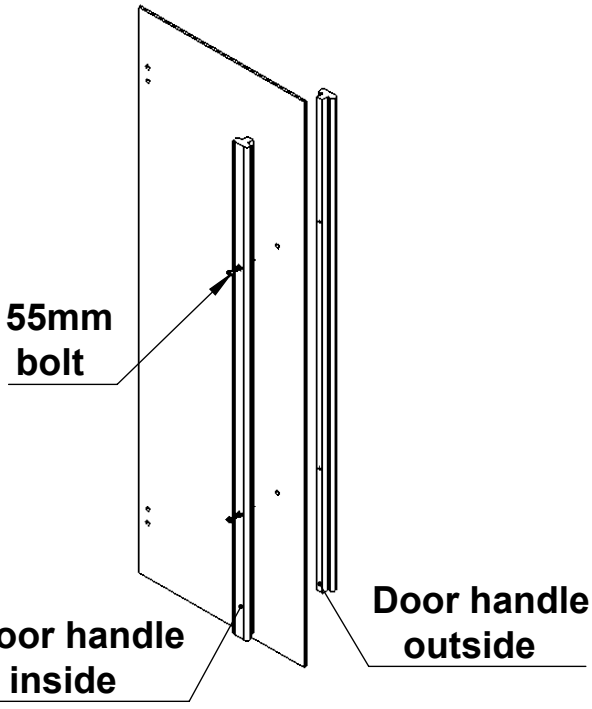

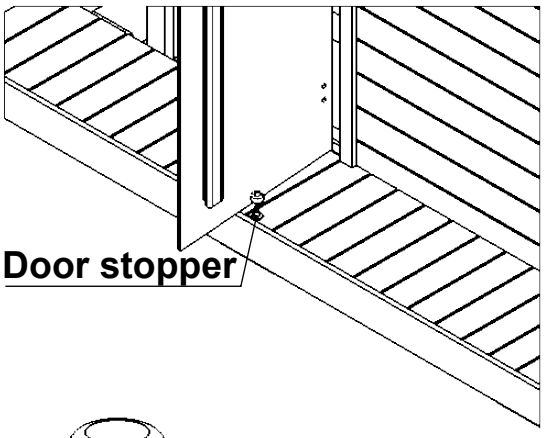

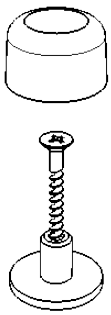

Use 50mm screw
to fix door stopper
to the terrace.